Touch bar for timber, steel and narrow stile doors

Touch bar

to the **European** standard **EN 1125**

Touch bar 7150

Type	Cylinder bore	Dim x	Stainless steel	Aluminium F1
Active leaf/ Inactive leaf (non handed)		808 mm 1158 mm 1458 mm	B 7150 2000 B 7150 2001 B 7150 2002	B 7150 0000 B 7150 0001 B 7150 0002

Type	Cylinder bore	Dim x	Stainless steel	Aluminium F1
Active leaf DIN lh	CB 72	808 mm 1158 mm 1458 mm	B 7150 3000 B 7150 3001 B 7150 3002	B 7150 1000 B 7150 1001 B 7150 1002
Active leaf DIN rh	CB 72	808 mm 1158 mm 1458 mm	B 7150 3050 B 7150 3051 B 7150 3052	B 7150 1050 B 7150 1051 B 7150 1052
Active leaf DIN lh	CH-RZ 74	808 mm 1158 mm 1458 mm	B 7150 3020 B 7150 3021 B 7150 3022	B 7150 1020 B 7150 1021 B 7150 1022
Active leaf DIN rh	CH-RZ 74	808 mm 1158 mm 1458 mm	B 7150 3070 B 7150 3071 B 7150 3072	B 7150 1070 B 7150 1071 B 7150 1072

Type	Cylinder bore	Dim x	Stainless steel	Aluminium F1
Inactive leaf DIN lh	without	808 mm 1158 mm 1458 mm	B 7150 3100 B 7150 3101 B 7150 3102	B 7150 1100 B 7150 1101 B 7150 1102
Inactive leaf DIN rh	without	808 mm 1158 mm 1458 mm	B 7150 3150 B 7150 3151 B 7150 3152	B 7150 1150 B 7150 1151 B 7150 1152

Dimensioned drawings

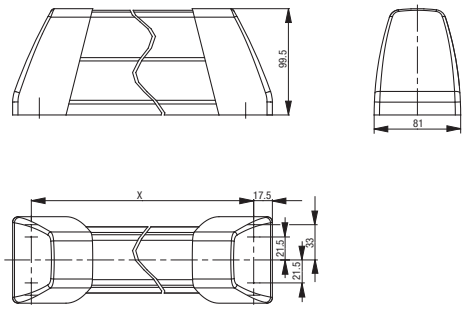

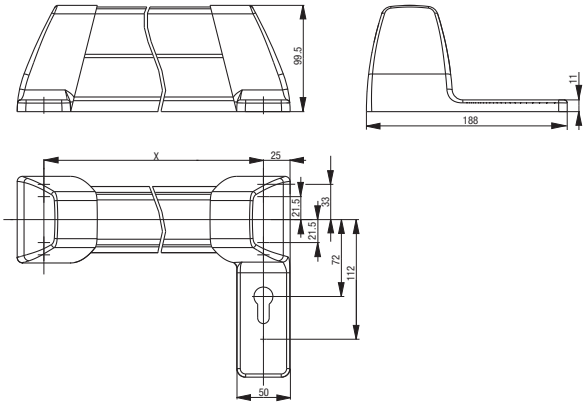

Product information

- BKS Touch bar for the use on smoke protection, fire protection and escape doors to DIN 18 273 + DIN 4102 + DIN EN 1634, with integrated gear, 9 mm square, retaining spring. Approved to DIN EN 1125 only in combination with approved BKS locks. Types varying according to the use on active and/ or inactive door leaves.
- Cylinder bore: CB 72 mm or without bore
- Usable DIN right and DIN left
- Finish: - Aluminium F1
  - Stainless steel
- Mounting accessories included

Gretsch-Unitas GmbH
Baubeschläge
Johann-Maus-Str. 3
D-71254 Ditzingen
Tel. +49 (0) 71 56 3 01-0
Fax +49 (0) 71 56 3 01-2 93

BKS GmbH
Heidestr. 71
D-42549 Velbert
Tel. +49 (0) 20 51 2 01-0
Fax +49 (0) 20 51 2 01-4 31

WP02006-04-2-2 05/2009 Printed in Germany