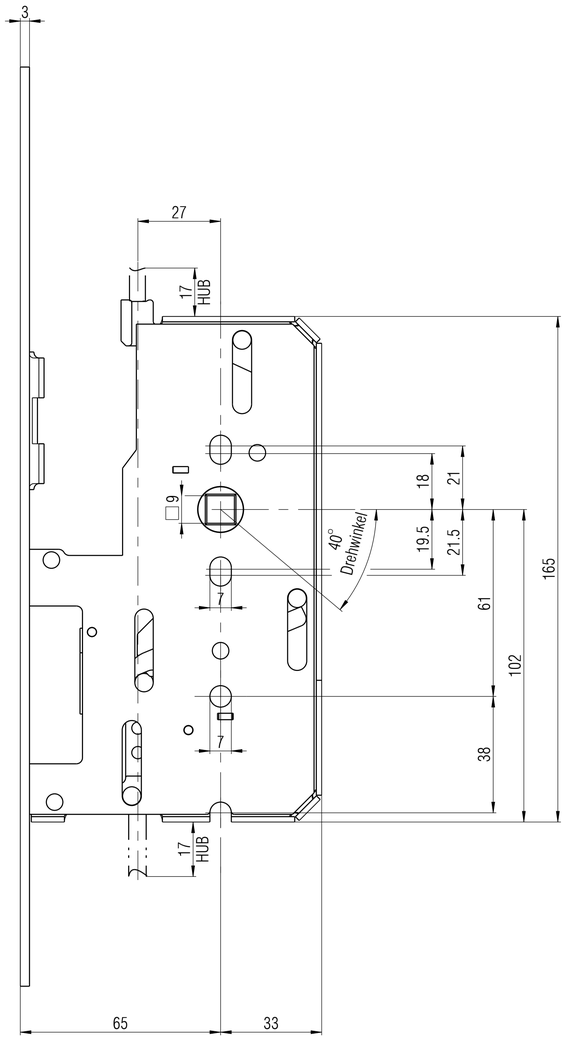

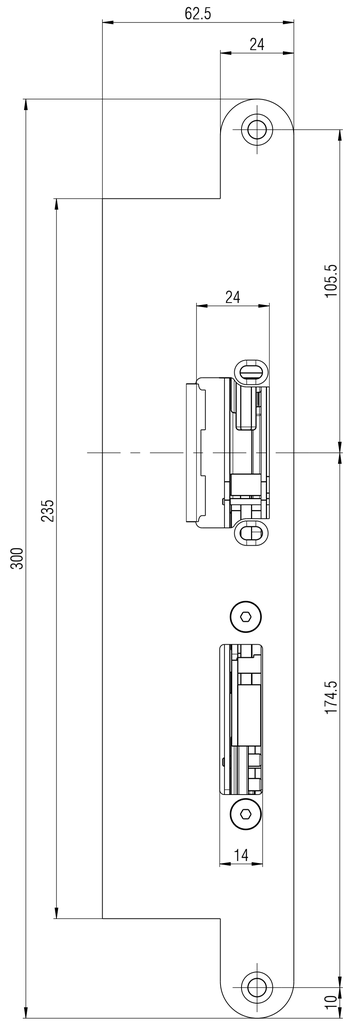

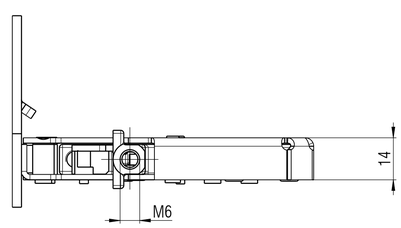

G-U

B_2392_0232_BD01

Scale
1:1

Draft	03.07.2017	SZ