GRETSCH-UNITAS

	Item	Description		Order no.	321	330	431	541	550	532	651	633	761	770	743
F&S basic hardware set K-18391-00-0 up to 80kg	1	F&S bogie		6-35981-00-0	1	1	1	2	2	2	2	2	3	3	3
	2	F&S guide roll		6-36053-00-0											
	3	F&S pivot-rest		6-36114-00-L											
				6-36114-00-R											
	4	F&S plate		9-47147-00-0											
	5	Countersunk screw DIN 7500 – ME M4 x 16 – 8.8–H		9-13785-16-R											
F&S sash hinge set K-18394-50-0	6	F&S sash hinge complete		6-36113-50-0	1	2	2	3	4	3	4	4	5	6	5
F&S PVC profiles set K-18395-99-0	7	F&S roller track	2960	9-47431-30-0	1										
			3960	9-47431-40-0											
			5000	9-47431-50-0											
			6700	9-47431-67-0											
	8	F&S guide track	2960	9-47432-30-0											
			3960	9-47432-40-0											
			5000	9-47432-50-0											
			6700	9-47432-67-0											
	9	F&S cover profile for roller track	2960	P-01953-30-0											
			3960	P-01953-40-0											
			5000	P-01953-50-0											
			6700	P-01953-67-0											
	10	F&S cover profile for guide track	2960	P-01954-30-0											
			3960	P-01954-40-0											
			5000	P-01954-50-0											
			6700	P-01954-67-0											
	11	F&S brush seal	2960	9-47560-30-0											
			3960	9-47560-40-0											
			5000	9-47560-50-0											
			6700	9-47560-67-0											
	12	F&S end cap for roller track		9-47564-01-L											
				9-47564-01-R											
	13	F&S end cap for guide track		9-47563-01-L											
				9-47563-01-R											
	15	Corner-drive		6-32021-00-0	2	1	2	2	1	2	2	2	2	1	2
F&S adapter set for roller track PVC K-18398-00-0	7A	F&S roller track		9-47431-11-0	1										
	31	F&S cover cap		6-37083-00-0											
CLS–LOG	21A	ZH FHH lever-operated gear (fixed handle height)	SRH 851-1100	G-22182-00-0	1	-	1	1	-	1	1	1	1	-	1
			SRH 1101-1350	G-22183-00-0											
			SRH 1351-1600	G-22184-00-0											
			SRH 1601-1850	G-22185-00-0											
			SRH 1851-2100	G-22186-00-0											
			SRH 2101-2350	G-22187-00-0											
	21B	ZH VHH lever-operated gear (variable handle height)	SRH 851-950	G-22170-00-0	1	-	1	1	-	1	1	1	1	-	1
			SRH 951-1450	G-22171-00-0											
			SRH 1451-1950	G-22172-00-0											
			SRH 1951-2350	G-22173-00-0											
	26	DIRIGENT-F/F turn handle		6-28101-99-0	1	2	2	3	4	3	4	4	5	6	5
	26A	DIRIGENT-F turn handle		6-28072-99-0	1										
F&S strikers set K-18985-99	28A	F&S striker		acc. to profile	Number of strikers depending on element size										
	28B	Standard striker													
	28G	Steel Sec striker													
F&S drilling jig set for pivot-rest K-18870-99-0	29	Drilling jig set for pivot-rest		acc. to profile	1										
F&S drilling jig set for sash hinge complete K-18875-99-0	30	Drilling jig set for complete sash hinge		acc. to profile	1										
CLS–wLC–MA15 CLS–T&T	50A	FHH gear, 15 BS	SRH 851-1100 / LC–MA 1	G-22124-00-0	1	1	1	1	1	1	1	1	1	1	1
			SRH 1101-1350 / 1	G-22125-00-0											
			SRH 1351-1600 / 2	G-22127-00-0											
			SRH 1601-1850 / 3	G-22128-00-0											
			SRH 1851-2100 / 3	G-22133-00-0											
			SRH 2101-2350 / 4	G-22134-00-0											
	50D	VHH gear, 15 BS	SRH 851-1200 / 1	G-22082-00-0											
			SRH 951-1450 / 1	G-22083-00-0											
			SRH 1201-1700 / 2	G-22084-00-0											
			SRH 1451-1950 / 2	G-22085-00-0											
			SRH 1951-2350 / 3	G-22086-00-0											
CLS–w/oLC–MA15 CLS–TU-ON	50E	FHH gear, 15 BS, without locking cam	SRH 851-1100 / 0	G-22401-00-0	1	1	1	2	2	2	2	2	3	3	3
			SRH 1101-1350 / 0	G-22402-00-0											
			SRH 1351-1600 / 0	G-22404-00-0											
			SRH 1601-1850 / 0	G-22405-00-0											
			SRH 1851-2100 / 0	G-22410-00-0											
			SRH 2101-2350 / 0	G-22411-00-0											
	50F	VHH gear, 15 BS, without locking cam	SRH 851-1200 / 0	G-22800-00-0											
			SRH 951-1450 / 0	G-22801-00-0											
			SRH 1201-1700 / 0	G-22802-00-0											
			SRH 1451-1950 / 0	G-22803-00-0											
			SRH 1951-2350 / 0	G-22804-00-0											

	Item	Description		Order no.	321	330	431	541	550	532	651	633	761	770	743
CLS–w/oLC–MA45	50G	FHH gear, 45 BS, without locking cam	SRH 851-1100 / LC–MA 0	6-33212-45-0	-	1	1	1	2	1	2	2	2	3	2
			SRH 1101-1350 / 0	6-33213-45-0											
			SRH 1351-1600 / 0	6-33214-45-0											
			SRH 1601-1850 / 0	6-33215-45-0											
			SRH 1851-2100 / 0	6-33216-45-0											
			SRH 2101-2350 / 0	6-33217-45-0											
	50H	VHH gear, 45 BS, without locking cam	SRH 851-950 / 0	G-22343-45-0											
			SRH 951-1450 / 0	6-38945-45-0											
			SRH 1451-1950 / 0	6-39027-45-0											
			SRH 1951-2350 / 0	6-39028-45-0											
	51	Extension piece 90°		6-32624-00-0	1	2	2	3	4	3	4	4	5	6	5
	51A	Extension piece 180° (VHH)		6-32303-00-0	3	3	4	5	5	5	6	6	7	7	7
	51B	Gear connector 90° with LC–MA		6-32104-00-0	-	1	-	-	1	1	-	1	-	1	1
	52	Sec centre-lock	SRH 851-1100 / 2	6-32008-05-0	2	1	2	2	1	2	2	2	2	1	2
			SRH 1101-1350 / 2	6-32008-07-0											
			SRH 1351-1850 / 3	6-32008-12-0											
			SRH 1851-2100 / 3	6-32008-15-0											
			SRH 2101-2350 / 4	6-32008-19-0											
	52B	T&T centre-lock (FHH + VHH)	SRW 751-1000 / 2	6-32076-05-0	2	1	2	2	1	2	2	2	2	1	2
	52C	Sec centre-lock 215 (FHH + VHH)	SRW 500-750 / 1	6-32012-00-0											
	52D	Sec centre-lock 215-C	1	6-32011-00-0	2	4	4	6	8	6	8	8	10	12	10
	52L	Extension (horizontal top)	SRW 500-600 / 1	G-22385-03-0	2	4	4	6	8	6	8	8	10	12	10
			SRW 601-750 / 2	G-22385-06-0											
			SRW 751-1000 / 2	G-22385-08-0											
	53	F&S packers set	3 mm	K-18510-03-0	acc. to profile										
			4 mm	K-18510-04-0											
			5 mm	K-18510-05-0											
			6 mm	K-18510-06-0											
			12 mm	K-18510-12-0											
	54	F&S spacing bushes set	42 mm	K-18986-42-0	acc. to profile										
			72 mm	K-18986-72-0											
			74 mm	K-18986-74-0											
			81 mm	K-18986-81-0											
			88 mm	K-18986-88-0											
			92 mm	K-18986-92-0											
	56B	Folding catch		K-18929-10-0	-	1	1	-	1	1	1	2	-	1	1
	66	Travel restrictor 90° (FHH + VHH)		9-33432-00-0	1	1	1	1	1	2	1	2	1	1	2
	67	Rod guide (FHH)		8-00805-00-0	5	4	6	7	6	7	8	8	9	8	9
		Rod guide (VHH)			7	5	8	9	7	9	10	10	11	9	11
up to 80kg	68	UNI-JET D stay-guide	SRW 500-750	6-31512-06-0	2	1	2	2	1	2	2	2	2	1	2
			SRW 751-1000	6-31512-08-0											
		UNI-JET SC stay-guide	SRW 500-750 / 1	6-34088-06-0											
			SRW 751-1000 / 2	6-34088-08-0											
up to 80kg		**TU-ON UNI-JET SC**	Hinge-side	0-44889-DD-0	1	1	1	1	1	2	1	2	1	1	2
		T&T UNI-JET SC	Hinge-side	0-44889-DD-0	1	-	1	1	-	-	1	-	1	-	-
		TU-ON UNI-JET D	Hinge-side	0-46603-DD-0	1	1	1	1	1	2	1	2	1	1	2
		T&T UNI-JET D	Hinge-side	0-46603-DD-0	1	-	1	1	-	-	1	-	1	-	-

Accessories

	Description			Order no.	Qty. per pattern
47	Drilling jig for roller track and guide track			6-37513-99-0	1
44	DIRIGENT-F/A turn handle (exterior)			6-25993-99-0	
50B	PC gear 25 BS, FHH – PC gear 50 BS, FHH (lockable)	SRH 1851-2100	3	G-22315-99-0	
		SRH 2101-2350	4	G-22316-99-0	
55A	Installation aid for strikers			9-49291-00-0	
55B	Installation aid for bottom strikers			9-49290-99-0	
57	Drilling jig for folding catch			6-25575-00-0	
58	Open-end spanner SW17			9-48667-00-0	
59	UNI-JET adjusting tool			6-37291-00-0	
69	Pull-handle for stay-bearing pin			6-38513-99-0	

The product guidelines of the profile manufacturers regarding construction, assembly, max. sash dimensions, max. sash weights and material qualities (eg linear expansion) are to be observed.

Hardware fixing:

The specified fastening screws are a recommendation based on our experience. The responsibility for the appropriate fastening of hardware components lies with the window and door fabricator.

Specify when ordering:

FRW (frame rebate width)
SRW (sash rebate width)
SRH (sash rebate height)

Pattern
Finish
Turn-Only or Tilt&Turn hardware

Application range

Calculation dimension B min. 500, max. 1000 mm
Sash rebate height SRH min. 851, max. 2350 mm
Max. sash weight 80 kg

Note:
SRH and SRW to be calculated depending on profile system.

Sash configuration pattern:

Sheet 2	Sectional drawing UNI-JET SC up to 80 kg sash weight
Sheet 3	Sectional drawing UNI-JET D up to 80 kg sash weight
Sheet 4	General overview of Fold&Slide hardware
Sheet 5	Central locking system with BS15 gear without LC–MA / Central locking system with BS15 gear with LC–MA CLS–w/oLC–MA15 CLS–wLC–MA15 Central locking system with BS45 gear without LC–MA CLS–w/oLC–MA45
Sheet 6	CLS with lever-operated gear CLS–LOG
Sheet 7	Central locking system for Turn-Only windows / Central locking system for Tilt&Turn windows CLS–TU-ON CLS–T&T
Sheet 8	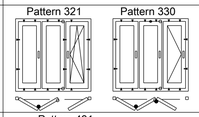 Pattern 321 Pattern 330
Sheet 9	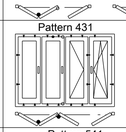 Pattern 431
Sheet 10	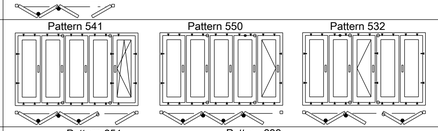 Pattern 541 Pattern 550 Pattern 532
Sheet 11	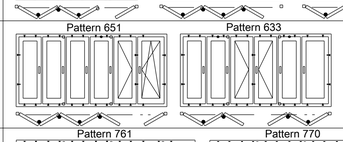 Pattern 651 Pattern 633
Sheet 12	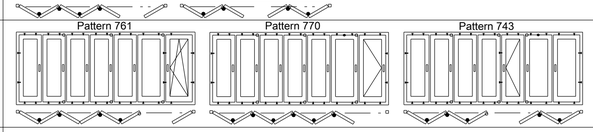 Pattern 761 Pattern 770 Pattern 743
Sheet 13	Folding catch
Sheet 14	Accessories and drilling jigs

Depicted with dummy mullion profile

Description
Fold&Slide hardware GU-923, inward
Neutral PVC profiles
Version with dummy-mullion profile

Release No. --	Level	Released		Scale --	Modification 6
Mod. No. G33134	Ver.	--	--		Size 1
	Draft	23.03.2017	Mj		Drawing No. 0-46888-BM-0-EN
Replacement for --					Sheet 1/14

EN
ES
FR
RU
--

The documents accompanying the product were issued when the product was manufactured. Due to the fact that our products undergo continuous development, you should verify at www.g-u.com, if the technical documents you have at hand are up to date. Be sure to use the latest edition of our technical documents.
Proprietary rights apply in accordance with ISO 16016.

V5

GRETSCH-UNITAS

Pattern 431

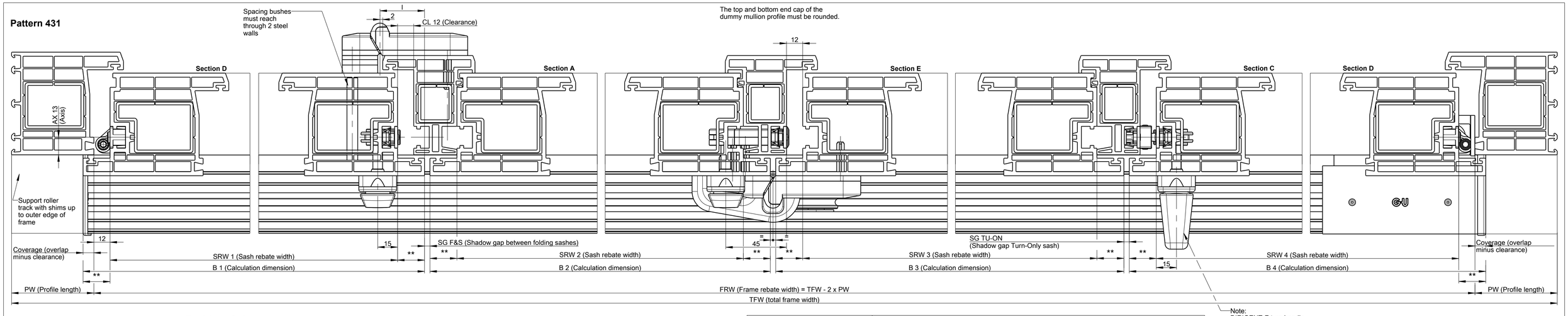

Position of pivot-rests

Installation at the top
Standard installation / Alternative installation

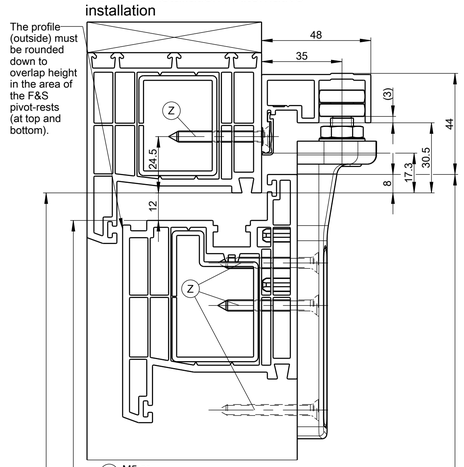

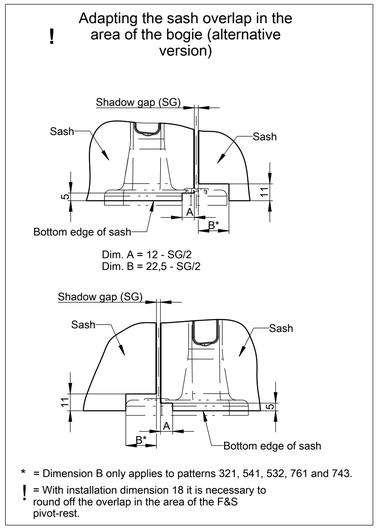

Position of hinges

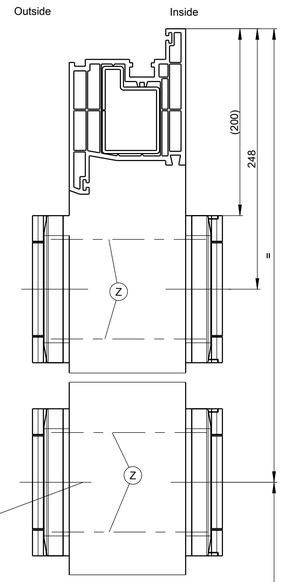

FRH (Frame rebate height)
SRH (Door-leaf rebate height)
SH (Door leaf height)

Standard installation of roller track

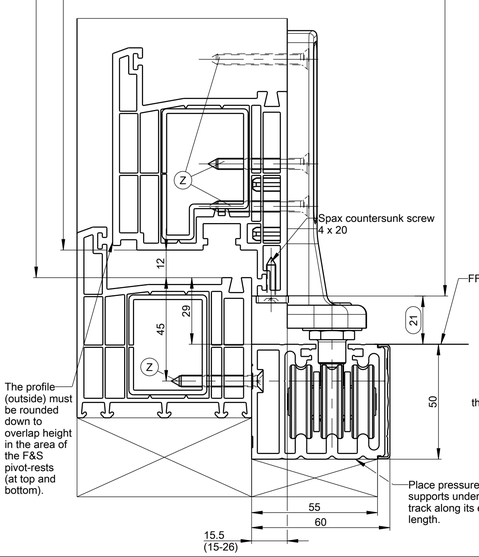

Standard installation of roller track

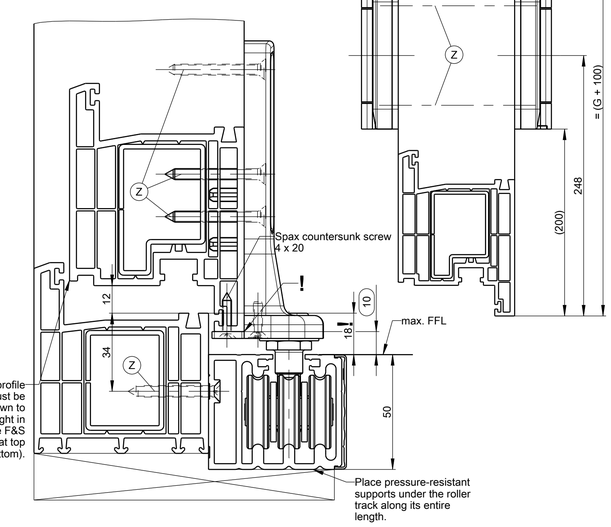

Consider (+/–) signs when employing the a, b, c, d, e value in the formula.

g = laterally reversed

$$B = \frac{FRW}{\text{Number of leaves}} + a + (b \times \text{Coverage}) + (c \times \text{SG F\&S}) + (d \times \text{SG TU-ON}) + (e \times l)$$

Sectional views

Pattern	B 1	B 2	B 3	B 4	B 5	B 6	B 7
321 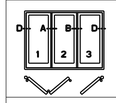	**D-A** a=6,43 b=1,00 c=-0,08 d=-0,08 e=0,67	**A-B** a=-12,87 b=0,00 c=-0,83 d=-0,83 e=-1,33	**B-Dg** a=6,43 b=1,00 c=-0,08 d=-0,08 e=0,67				
330 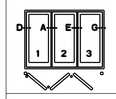	**D-A** a=12,87 b=1,33 c=0,00 d=0,00 e=0,67	**A-E** a=-6,43 b=0,33 c=-1,50 d=0,00 e=-1,33	**E-G** a=-6,43 b=0,33 c=-0,50 d=0,00 e=0,67				
431 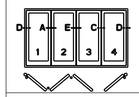	**D-A** a=9,65 b=1,00 c=-0,17 d=-0,08 e=0,50	**A-E** a=-9,65 b=0,00 c=-1,17 d=-0,58 e=-1,50	**E-C** a=-9,65 b=0,00 c=-0,50 d=-0,25 e=0,50	**C-Dg** a=9,65 b=1,00 c=-0,17 d=-0,08 e=0,50			
541 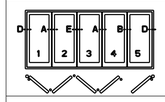	**D-A** a=11,58 b=1,00 c=-0,08 d=-0,03 e=0,80	**A-E** a=-7,72 b=0,00 c=-1,20 d=-0,40 e=-1,20	**E-A** a=-7,72 b=0,00 c=-0,45 d=-0,15 e=0,80	**A-B** a=-7,72 b=0,00 c=-1,20 d=-0,40 e=-1,20	**B-Dg** a=11,58 b=1,00 c=-0,08 d=-0,03 e=0,80		
550 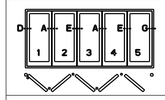	**D-A** a=15,44 b=1,20 c=0,00 d=0,00 e=0,80	**A-E** a=-3,86 b=0,20 c=-1,50 d=0,00 e=-1,20	**E-A** a=-3,86 b=0,20 c=-0,50 d=0,00 e=0,80	**A-E** a=-3,86 b=0,20 c=-1,50 d=0,00 e=-1,20	**E-G** a=-3,86 b=0,20 c=-0,50 d=0,00 e=0,80		
532 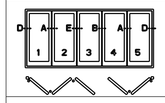	**D-A** a=11,58 b=1,00 c=-0,08 d=-0,03 e=0,80	**A-E** a=-7,72 b=0,00 c=-1,20 d=-0,40 e=-1,20	**E-Bg** a=-7,72 b=0,00 c=-0,45 d=-0,15 e=0,80	**Bg-Ag** a=-7,72 b=0,00 c=-1,20 d=-0,40 e=-1,20	**Ag-Dg** a=11,58 b=1,00 c=-0,08 d=-0,03 e=0,80		
651 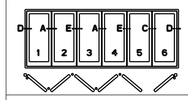	**D-A** a=12,87 b=1,00 c=-0,13 d=-0,03 e=0,67	**A-E** a=-6,43 b=0,00 c=-1,33 d=-0,33 e=-1,33	**E-A** a=-6,43 b=0,00 c=-0,53 d=-0,13 e=0,67	**A-E** a=-6,43 b=0,00 c=-1,33 d=-0,33 e=-1,33	**E-C** a=-6,43 b=0,00 c=-0,53 d=-0,13 e=0,67	**C-Dg** a=12,87 b=1,00 c=-0,13 d=-0,03 e=0,67	
633 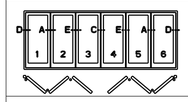	**D-A** a=12,87 b=1,00 c=-0,13 d=-0,03 e=0,67	**A-E** a=-6,43 b=0,00 c=-1,33 d=-0,33 e=-1,33	**E-C** a=-6,43 b=0,00 c=-0,53 d=-0,13 e=0,67	**C-Eg** a=-6,43 b=0,00 c=-0,53 d=-0,13 e=0,67	**Eg-Ag** a=-6,43 b=0,00 c=-1,33 d=-0,33 e=-1,33	**Ag-Dg** a=12,87 b=1,00 c=-0,13 d=-0,03 e=0,67	
761 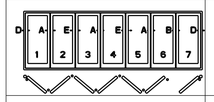	**D-A** a=13,79 b=1,00 c=-0,06 d=-0,01 e=0,86	**A-E** a=-5,51 b=0,00 c=-1,31 d=-0,26 e=-1,14	**E-A** a=-5,51 b=0,00 c=-0,48 d=-0,10 e=0,86	**A-E** a=-5,51 b=0,00 c=-1,31 d=-0,26 e=-1,14	**E-A** a=-5,51 b=0,00 c=-0,48 d=-0,10 e=0,86	**A-B** a=-5,51 b=0,00 c=-1,31 d=-0,26 e=-1,14	**B-Dg** a=13,79 b=1,00 c=-0,06 d=-0,01 e=0,86
770 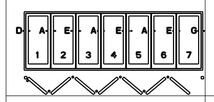	**D-A** a=16,54 b=1,14 c=0,00 d=0,00 e=0,86	**A-E** a=-2,76 b=0,14 c=-1,50 d=0,00 e=-1,14	**E-A** a=-2,76 b=0,14 c=-0,50 d=0,00 e=0,86	**A-E** a=-2,76 b=0,14 c=-1,50 d=0,00 e=-1,14	**E-A** a=-2,76 b=0,14 c=-0,50 d=0,00 e=0,86	**A-E** a=-2,76 b=0,14 c=-1,50 d=0,00 e=-1,14	**E-G** a=-2,76 b=0,14 c=-0,50 d=0,00 e=0,86
743 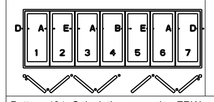	**D-A** a=13,79 b=1,00 c=-0,06 d=-0,01 e=0,86	**A-E** a=-5,51 b=0,00 c=-1,31 d=-0,26 e=-1,14	**E-A** a=-5,51 b=0,00 c=-0,48 d=-0,10 e=0,86	**A-B** a=-5,51 b=0,00 c=-1,31 d=-0,26 e=-1,14	**B-Eg** a=-5,51 b=0,00 c=-0,48 d=-0,10 e=0,86	**Eg-Ag** a=-5,51 b=0,00 c=-1,31 d=-0,26 e=-1,14	**Ag-Dg** a=13,79 b=1,00 c=-0,06 d=-0,01 e=0,86

Pattern 431; Calculation example:: FRW = 3000; Coverage = 8; SG F&S = 3; SG TU-ON = 3; l = 35

$$B\ 1 = \frac{3000}{4} + 9{,}65 + (1 \times 8) + (-0{,}17 \times 3) + (-0{,}08 \times 3) + (0{,}5 \times 35) = 784$$

Pattern 330 / 550 / 770

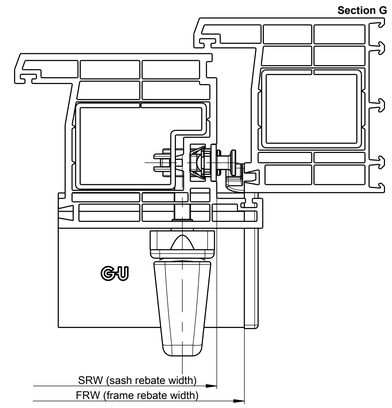

Pattern 321 / 541 / 743 / 761
Pattern 532: mirrored view

The top and bottom end cap of the dummy mullion profile must be rounded.

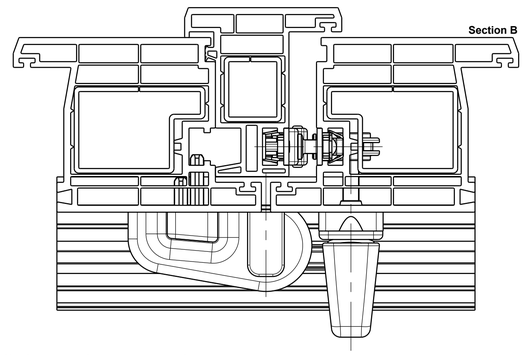

** Calculation of sash rebate width: SRW = calculated dimension B – 2 x overlap width

Attention!

The calculation formulas apply only if shadow gap (SG) and clearance (CL) are identical on all sashes.

With the pivot-rests it is necessary to mitre the reinforcement (top and bottom).

In this drawing calculation dimension (W) equals the sash width (SW).

Sectional drawing UNI-JET SC up to 80 kg sash weight

Description
Fold&Slide hardware GU-923, inward
Neutral PVC profiles
Version with dummy-mullion profile

SC

Release No. --	Level	Released	Scale --	Modification 6	Size 1
Mod. No. G33134	Ver.	--	--	Drawing No. 0-46888-BM-0-EN	Sheet 2/14
	Draft	23.03.2017	Mj		
Replacement for --					

EN
ES
FR
RU
--

The documents accompanying the product were issued when the product was manufactured. Due to the fact that our products undergo continuous development, you should verify at www.g-u.com, if the technical documents you have at hand are up to date. Be sure to use the latest edition of our technical documents.
Proprietary rights apply in accordance with ISO 16016.

V5

GRETSCH-UNITAS

Pattern 431

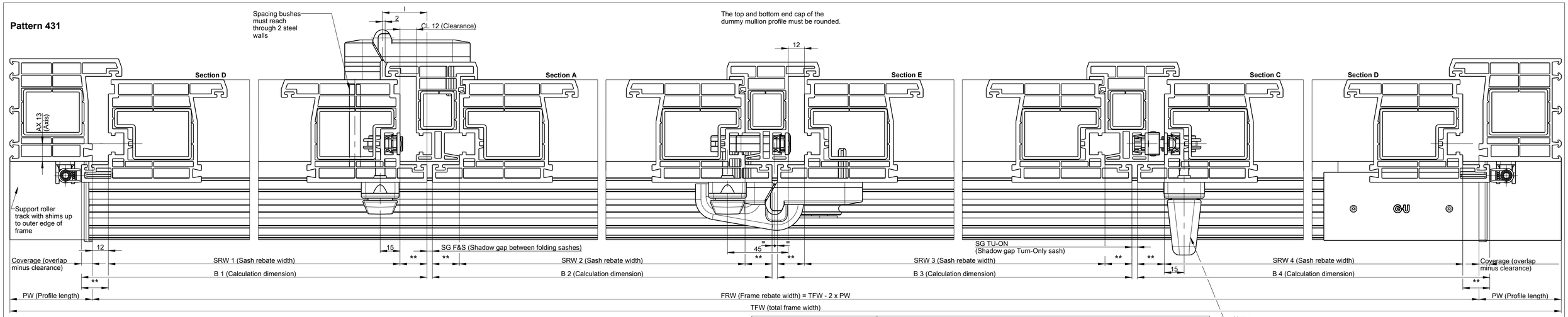

Position of pivot-rests

Installation at the top
Standard installation / Alternative installation

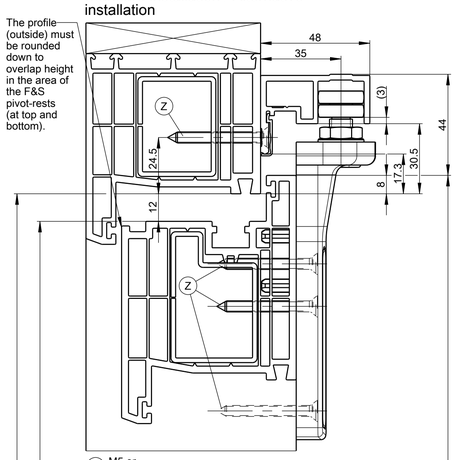

Adapting the sash overlap in the area of the bogie (alternative version)

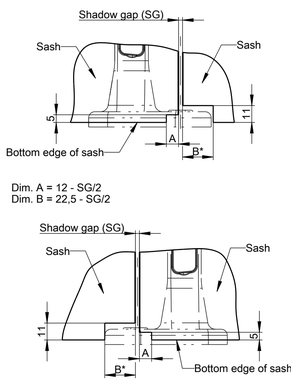

Dim. A = 12 - SG/2
Dim. B = 22,5 - SG/2

* = Dimension B only applies to patterns 321, 541, 532, 761 and 743.

! = With installation dimension 18 it is necessary to round off the overlap in the area of the F&S pivot-rest.

Position of hinges

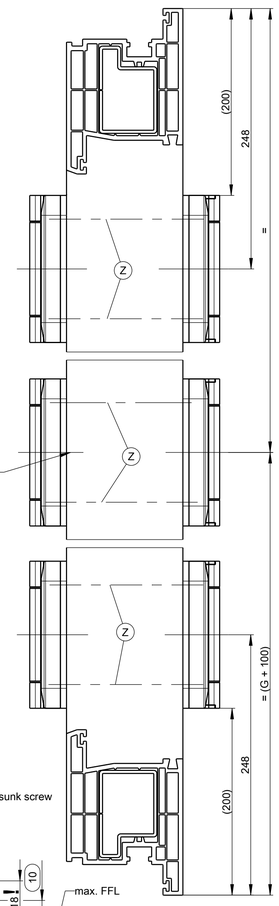

Note:
If the handle height (HH) coincides with the position of the centre hinges, all centre hinges should be displaced 100 mm upwards.

Standard installation of roller track

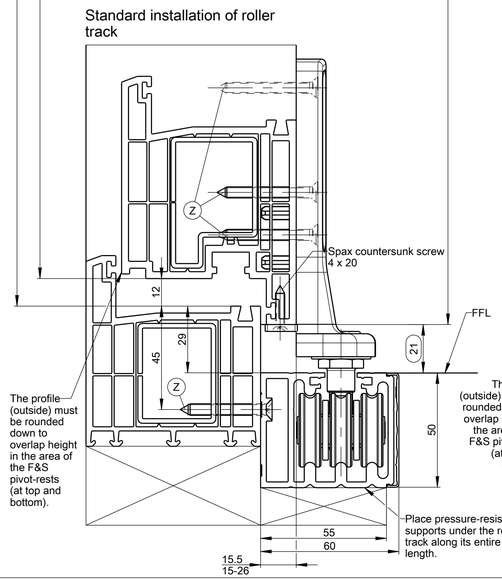

Standard installation of roller track

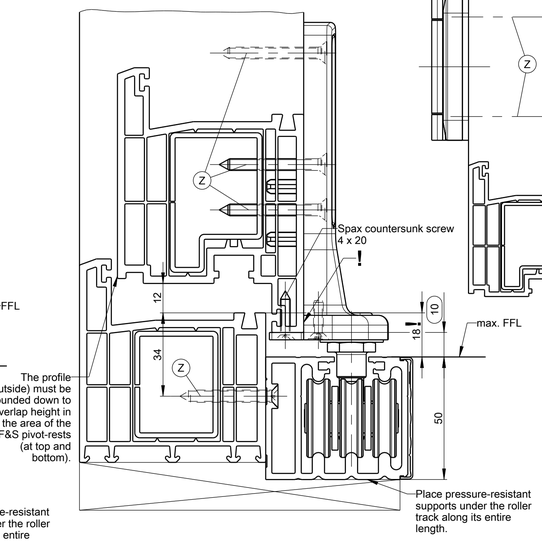

Consider (+/–) signs when employing the a, b, c, d, e value in the formula.

$$B = \frac{FRW}{\text{Number of leaves}} + a + (b \times \text{Coverage}) + (c \times \text{SG F\&S}) + (d \times \text{SG TU-ON}) + (e \times l)$$

g = laterally reversed

Pattern	Sectional views B 1	B 2	B 3	B 4	B 5	B 6	B 7
321	**D-A** a=1,50 b=1,00 c=-0,08 d=-0,08 e=0,67	**A-B** a=-3,00 b=0,00 c=-0,83 d=-0,83 e=-1,33	**B-Dg** a=1,50 b=1,00 c=-0,08 d=-0,08 e=0,67				
330	**D-A** a=3,00 b=1,33 c=0,00 d=0,00 e=0,67	**A-E** a=-1,50 b=0,33 c=-1,50 d=0,00 e=-1,33	**E-G** a=-1,50 b=0,33 c=-0,50 d=0,00 e=0,67				
431	**D-A** a=2,25 b=1,00 c=-0,17 d=-0,08 e=0,50	**A-E** a=-2,25 b=0,00 c=-1,17 d=-0,58 e=-1,50	**E-C** a=-2,25 b=0,00 c=-0,50 d=-0,25 e=0,50	**C-Dg** a=2,25 b=1,00 c=-0,17 d=-0,08 e=0,50			
541	**D-A** a=2,70 b=1,00 c=-0,08 d=-0,03 e=0,80	**A-E** a=-1,80 b=0,00 c=-1,20 d=-0,40 e=-1,20	**E-A** a=-1,80 b=0,00 c=-0,45 d=-0,15 e=0,80	**A-B** a=-1,80 b=0,00 c=-1,20 d=-0,40 e=-1,20	**B-Dg** a=2,70 b=1,00 c=-0,08 d=-0,03 e=0,80		
550	**D-A** a=3,60 b=1,20 c=0,00 d=0,00 e=0,80	**A-E** a=-0,90 b=0,20 c=-1,50 d=0,00 e=-1,20	**E-A** a=-0,90 b=0,20 c=-0,50 d=0,00 e=0,80	**A-E** a=-0,90 b=0,20 c=-1,50 d=0,00 e=-1,20	**E-G** a=-0,90 b=0,20 c=-0,50 d=0,00 e=0,80		
532	**D-A** a=2,70 b=1,00 c=-0,08 d=-0,03 e=0,80	**A-E** a=-1,80 b=0,00 c=-1,20 d=-0,40 e=-1,20	**E-Bg** a=-1,80 b=0,00 c=-0,45 d=-0,15 e=0,80	**Bg-Ag** a=-1,80 b=0,00 c=-1,20 d=-0,40 e=-1,20	**Ag-Dg** a=2,70 b=1,00 c=-0,08 d=-0,03 e=0,80		
651	**D-A** a=3,00 b=1,00 c=-0,13 d=-0,03 e=0,67	**A-E** a=-1,50 b=0,00 c=-1,33 d=-0,33 e=-1,33	**E-A** a=-1,50 b=0,00 c=-0,53 d=-0,13 e=0,67	**A-E** a=-1,50 b=0,00 c=-1,33 d=-0,33 e=-1,33	**E-C** a=-1,50 b=0,00 c=-0,53 d=-0,13 e=0,67	**C-Dg** a=3,00 b=1,00 c=-0,13 d=-0,03 e=0,67	
633	**D-A** a=3,00 b=1,00 c=-0,13 d=-0,03 e=0,67	**A-E** a=-1,50 b=0,00 c=-1,33 d=-0,33 e=-1,33	**E-C** a=-1,50 b=0,00 c=-0,53 d=-0,13 e=0,67	**C-Eg** a=-1,50 b=0,00 c=-0,53 d=-0,13 e=0,67	**Eg-Ag** a=-1,50 b=0,00 c=-1,33 d=-0,33 e=-1,33	**Ag-Dg** a=3,00 b=1,00 c=-0,13 d=-0,03 e=0,67	
761	**D-A** a=3,21 b=1,00 c=-0,06 d=-0,01 e=0,86	**A-E** a=-1,29 b=0,00 c=-1,31 d=-0,26 e=-1,14	**E-A** a=-1,29 b=0,00 c=-0,48 d=-0,10 e=0,86	**A-E** a=-1,29 b=0,00 c=-1,31 d=-0,26 e=-1,14	**E-A** a=-1,29 b=0,00 c=-0,48 d=-0,10 e=0,86	**A-B** a=-1,29 b=0,00 c=-1,31 d=-0,26 e=-1,14	**B-Dg** a=3,21 b=1,00 c=-0,06 d=-0,01 e=0,86
770	**D-A** a=3,86 b=1,14 c=0,00 d=0,00 e=0,86	**A-E** a=-0,64 b=0,14 c=-1,50 d=0,00 e=-1,14	**E-A** a=-0,64 b=0,14 c=-0,50 d=0,00 e=0,86	**A-E** a=-0,64 b=0,14 c=-1,50 d=0,00 e=-1,14	**E-A** a=-0,64 b=0,14 c=-0,50 d=0,00 e=0,86	**A-E** a=-0,64 b=0,14 c=-1,50 d=0,00 e=-1,14	**E-G** a=-0,64 b=0,14 c=-0,50 d=0,00 e=0,86
743	**D-A** a=3,21 b=1,00 c=-0,06 d=-0,01 e=0,86	**A-E** a=-1,29 b=0,00 c=-1,31 d=-0,26 e=-1,14	**E-A** a=-1,29 b=0,00 c=-0,48 d=-0,10 e=0,86	**A-B** a=-1,29 b=0,00 c=-1,31 d=-0,26 e=-1,14	**B-Eg** a=-1,29 b=0,00 c=-0,48 d=-0,10 e=0,86	**Eg-Ag** a=-1,29 b=0,00 c=-1,31 d=-0,26 e=-1,14	**Ag-Dg** a=3,21 b=1,00 c=-0,06 d=-0,01 e=0,86

Pattern 431; Calculation example:: FRW = 3000; Coverage = 8; SG F&S = 3; SG TU-ON = 3; L = 35

$$B\ 1 = \frac{3000}{4} + 2{,}25 + (1 \times 8) + (-0{,}17 \times 3) + (-0{,}08 \times 3) + (0{,}5 \times 35) = 777$$

Pattern 330 / 550 / 770

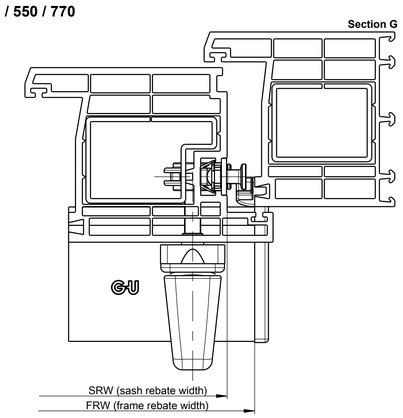

Pattern 321 / 541 / 743 / 761
Pattern 532: mirrored view

The top and bottom end cap of the dummy mullion profile must be rounded.

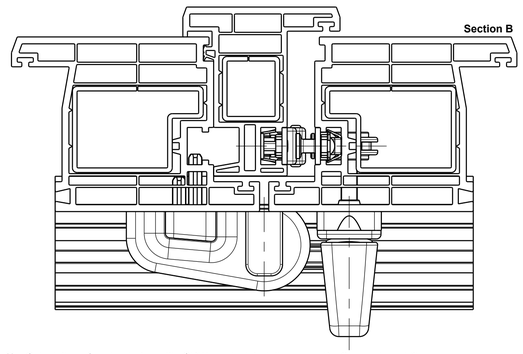

** Calculation of sash rebate width: SRW = calculated dimension B – 2 x overlap width

Attention!

The calculation formulas apply only if shadow gap (SG) and clearance (CL) are identical on all sashes.

With the pivot-rests it is necessary to mitre the reinforcement (top and bottom).

In this drawing calculation dimension (W) equals the sash width (SW).

Sectional drawing UNI-JET D up to 80 kg sash weight

Description
Fold&Slide hardware GU-923, inward
Neutral PVC profiles
Version with dummy-mullion profile

D

Release No. --	Level	Released		Scale --	Modification 6	Size 1
Mod. No. G33134	Ver.	--	--		Drawing No. 0-46888-BM-0-EN	Sheet 3/14
	Draft	23.03.2017	Mj			
Replacement for --						

The documents accompanying the product were issued when the product was manufactured. Due to the fact that our products undergo continuous development, you should verify at www.g-u.com, if the technical documents you have at hand are up to date. Be sure to use the latest edition of our technical documents.
Proprietary rights apply in accordance with ISO 16016.

EN
ES
FR
RU
--

V6

GRETSCH-UNITAS

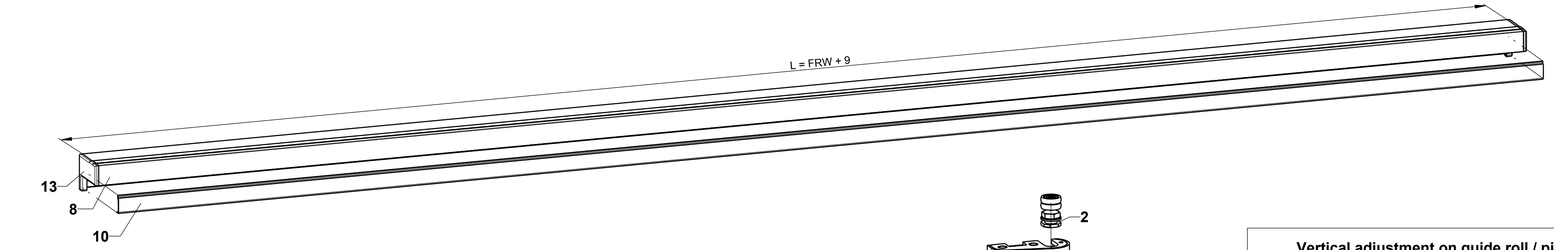

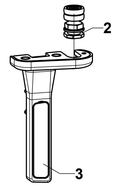

Fixing the pivot-rest cover

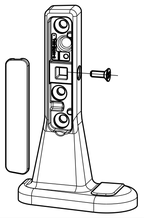

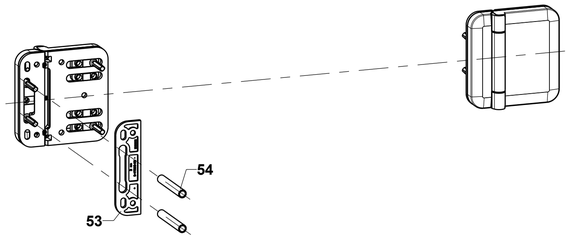

F&S packer item 53 and F&S spacing bush item 54 must be attached to each hinge.

Vertical adjustment on guide roll / pivot-rest

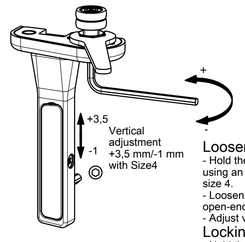

Loosening and adjusting
- Hold the set bolt using an Allen key size 4.
- Loosen and hold the locknut using an open-end spanner size 17
- Adjust vertically with Allen key size 4

Locking
- Hold the set bolt using an Allen key size 4.
- Firmly tighten locknut with open-end spanner size 17

Hinge adjustment

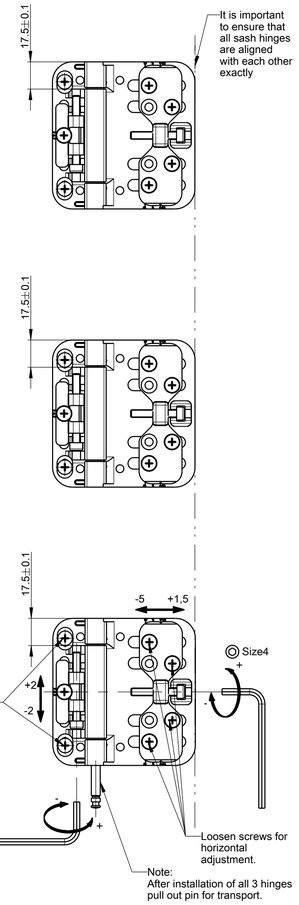

Fixing / removing the sash-hinge cover

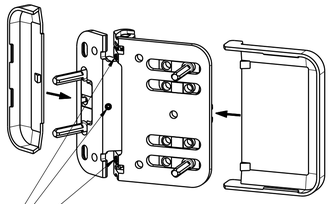

For attachment / removal of sash-hinge covers, the setscrews on the back must be tightened / loosened.
Open sashes to access the screws, if the F&S unit is already installed.

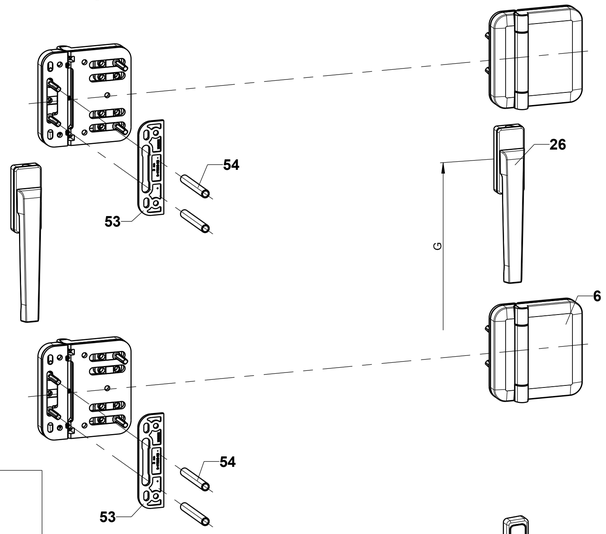

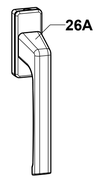

Vertical adjustment on bogie / pivot-rest

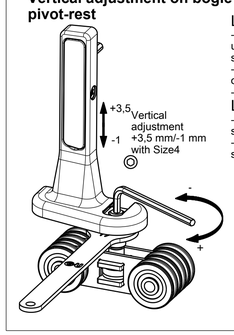

Loosening and adjusting
- Hold the set bolt using an Allen key size 4.
- Loosen and hold the locknut using an open-end spanner size 17
- Adjust vertically with Allen key size 4

Locking
- Hold the set bolt using an Allen key size 4.
- Firmly tighten locknut with open-end spanner size 17

Installation position of F&S plate (Item4)

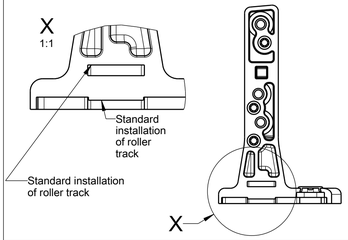

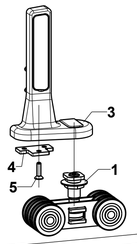

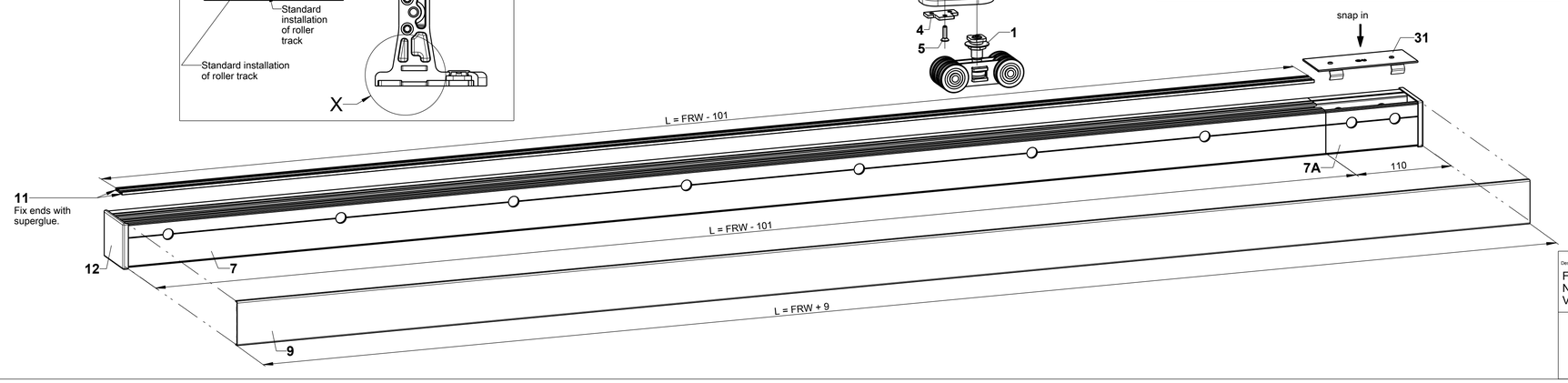

EN	
ES	
FR	
RU	
--	

The documents accompanying the product were issued when the product was manufactured. Due to the fact that our products undergo continuous development, you should verify at www.g-u.com, if the technical documents you have at hand are up to date. Be sure to use the latest edition of our technical documents.
Proprietary rights apply in accordance with ISO 16016.

V5

General overview of Fold&Slide hardware

Description
Fold&Slide hardware GU-923, inward
Neutral PVC profiles
Version with dummy-mullion profile

G-U	Release No. --	Level	Released		Scale --	Modification 6	Size 1
	Mod. No. G33134	Ver.	--	--		Drawing No. 0-46888-BM-0-EN	Sheet 4/14
		Draft	23.03.2017	Mj			
	Replacement for --						

GRETSCH-UNITAS

Central locking system with BS15 gear without LC–MA
CLS–w/oLC–MA15

Central locking system with BS45 gear without LC–MA
CLS–w/oLC–MA45

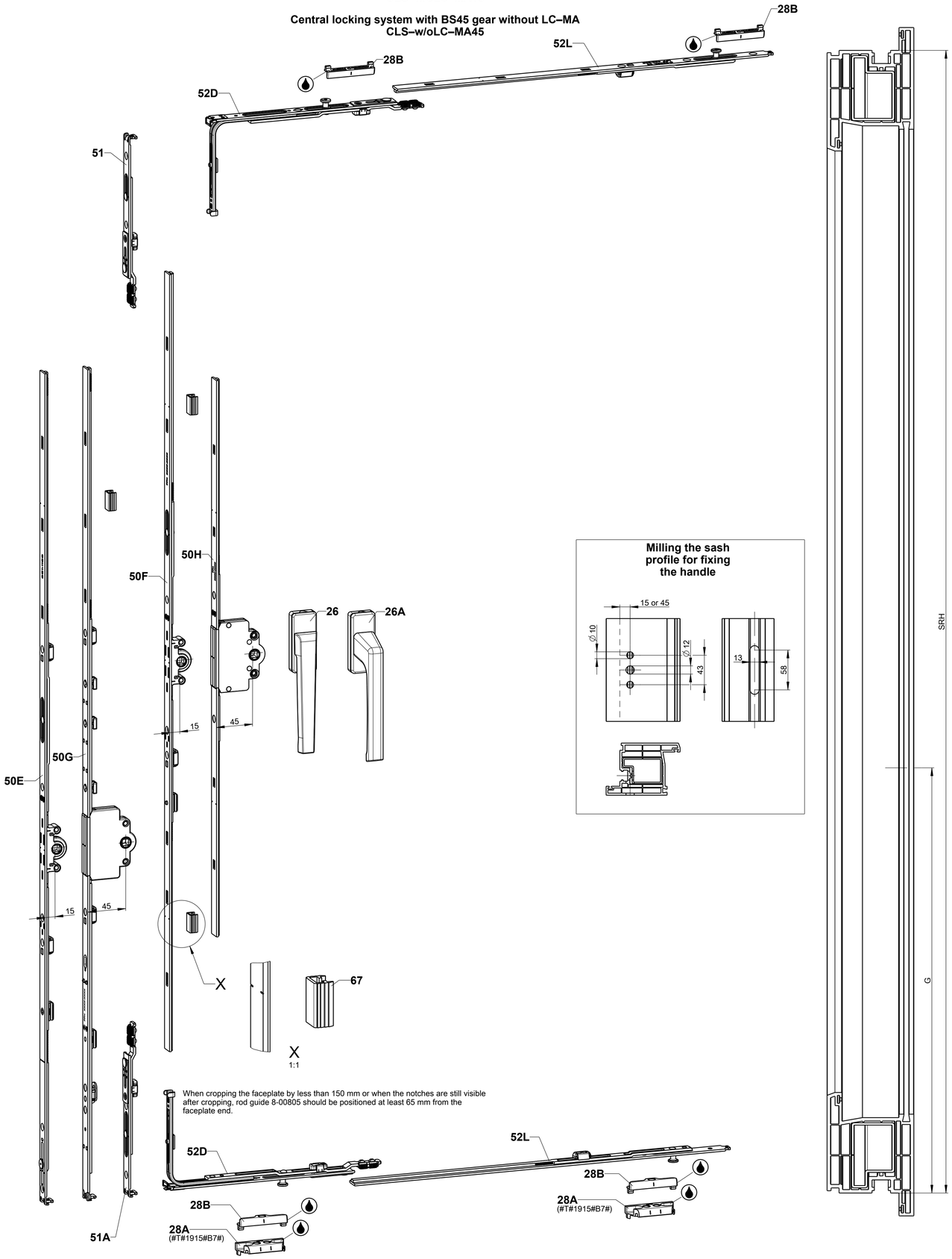

When cropping the faceplate by less than 150 mm or when the notches are still visible after cropping, rod guide 8-00805 should be positioned at least 65 mm from the faceplate end.

Milling the sash profile for fixing the handle

Central locking system with BS15 gear with LC–MA
CLS–wLC–MA15

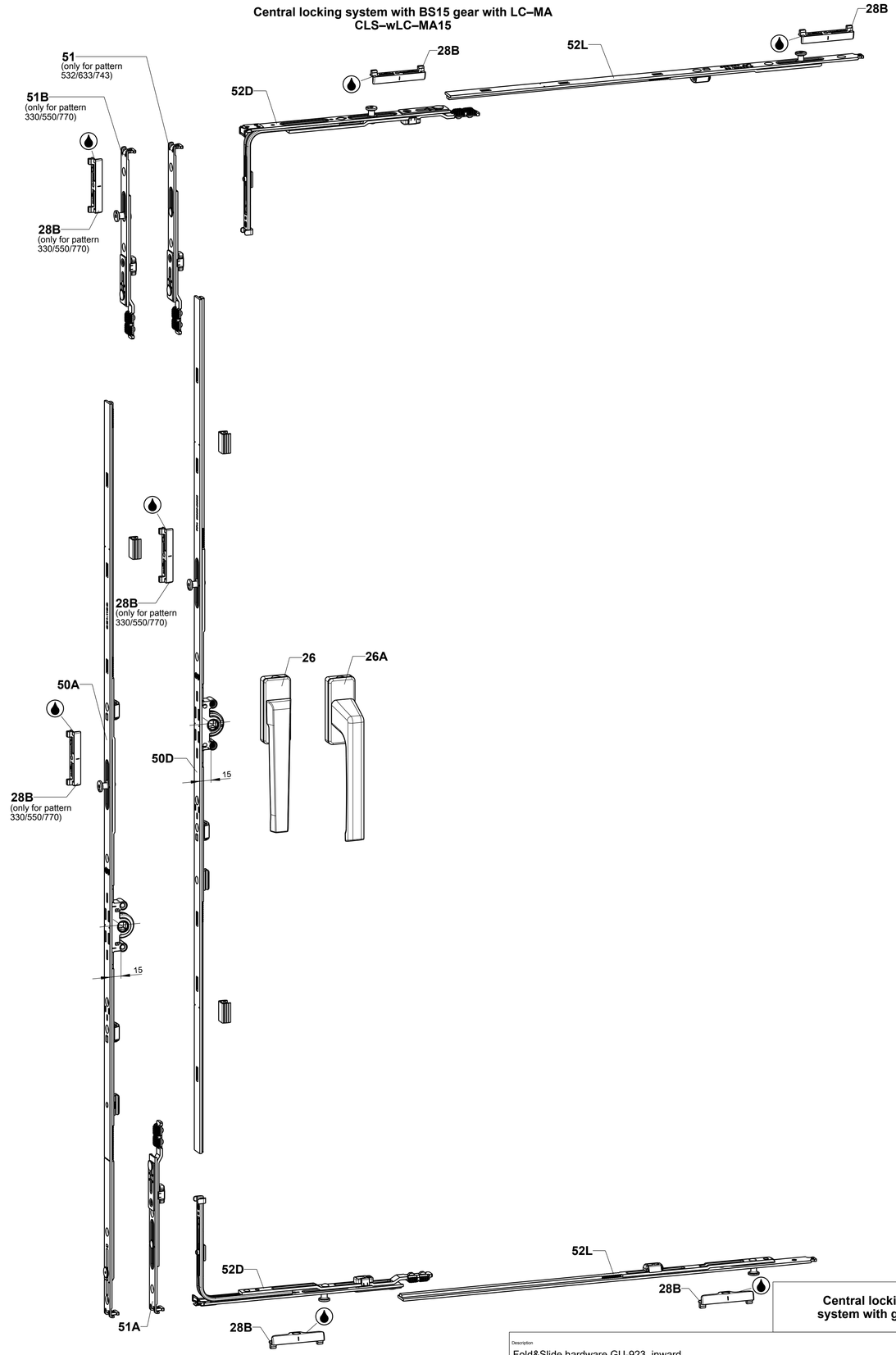

Lubricate all locking, moving, and bearing points with a lubricant free of resin and acid.

Central locking system with gear

Description
Fold&Slide hardware GU-923, inward
Neutral PVC profiles
Version with dummy-mullion profile

Release No. --	Level	Released		Scale --	Modification 6	Size 1
Mod. No. G33134	Ver.	--	--		Drawing No. 0-46888-BM-0-EN	Sheet 5/14
	Draft	23.03.2017	Mj			
Replacement for --						

The documents accompanying the product were issued when the product was manufactured. Due to the fact that our products undergo continuous development, you should verify at www.g-u.com, if the technical documents you have at hand are up to date. Be sure to use the latest edition of our technical documents.
Proprietary rights apply in accordance with ISO 16016.

EN
ES
FR
RU
--

V5

GRETSCH-UNITAS

CLS with lever-operated gear
CLS–LOG

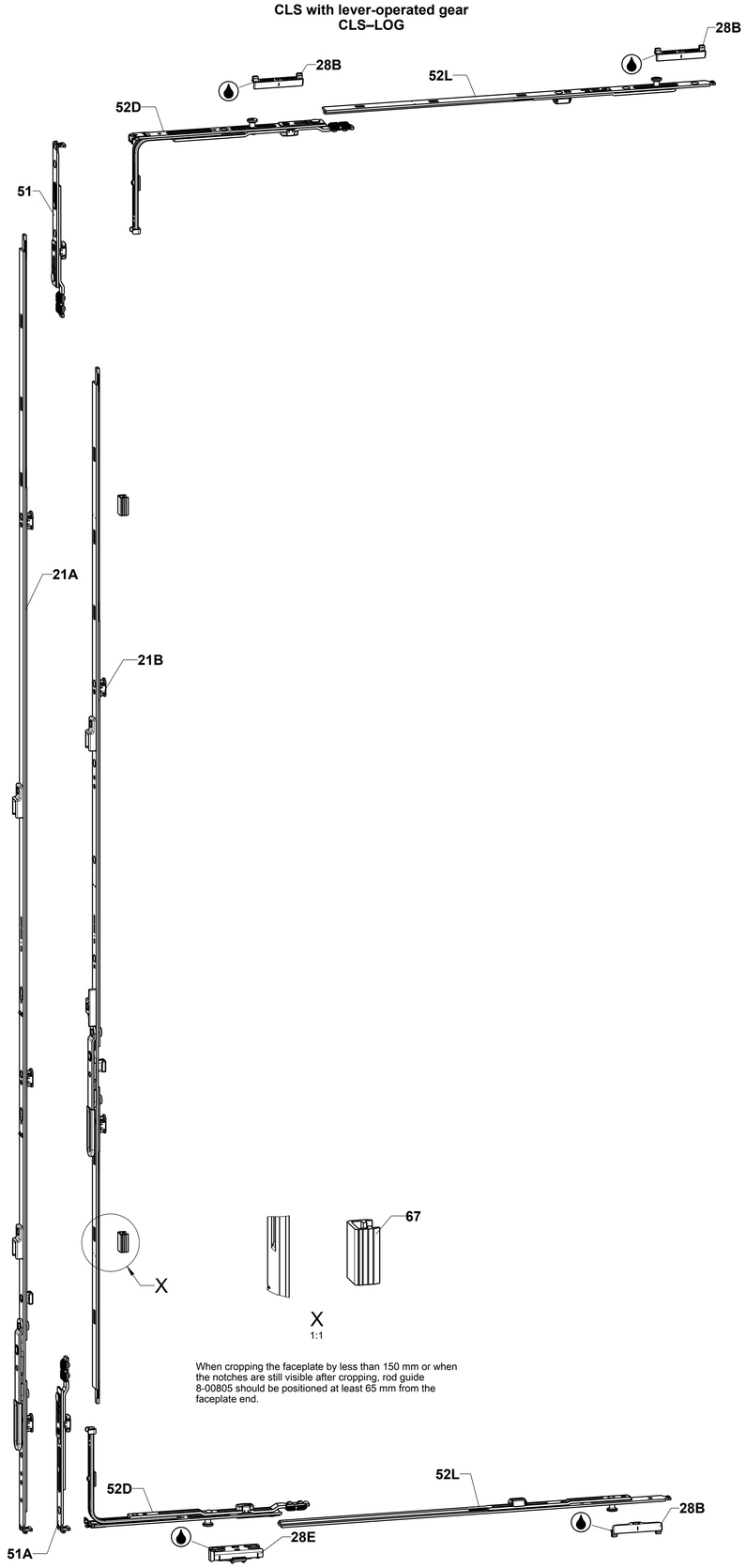

When cropping the faceplate by less than 150 mm or when the notches are still visible after cropping, rod guide 8-00805 should be positioned at least 65 mm from the faceplate end.

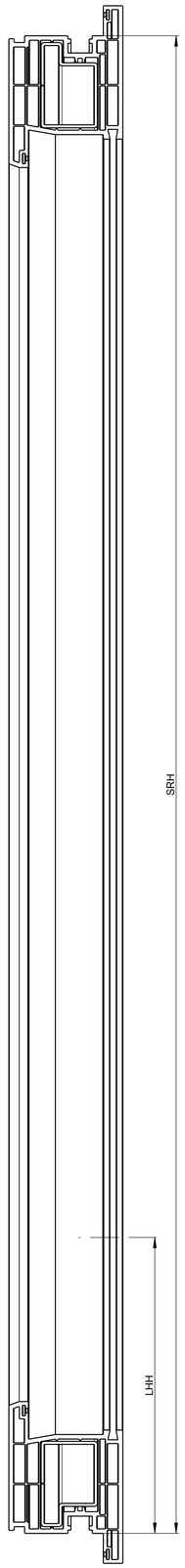

Lubricate all locking, moving, and bearing points with a lubricant free of resin and acid.

CLS with lever-operated gear

Description

Fold&Slide hardware GU-923, inward
Neutral PVC profiles
Version with dummy-mullion profile

Release No. --	Level	Released		Scale --	Modification 6
Mod. No. G33134	Ver.	--	--		Size 1
	Draft	23.03.2017	Mj		Drawing No. 0-46888-BM-0-EN
Replacement for --					Sheet 6/14

The documents accompanying the product were issued when the product was manufactured. Due to the fact that our products undergo continuous development, you should verify at www.g-u.com, if the technical documents you have at hand are up to date. Be sure to use the latest edition of our technical documents.
Proprietary rights apply in accordance with ISO 16016.

EN
ES
FR
RU
--

V5

GRETSCH-UNITAS

Central locking system for Turn-Only windows
CLS–TU-ON

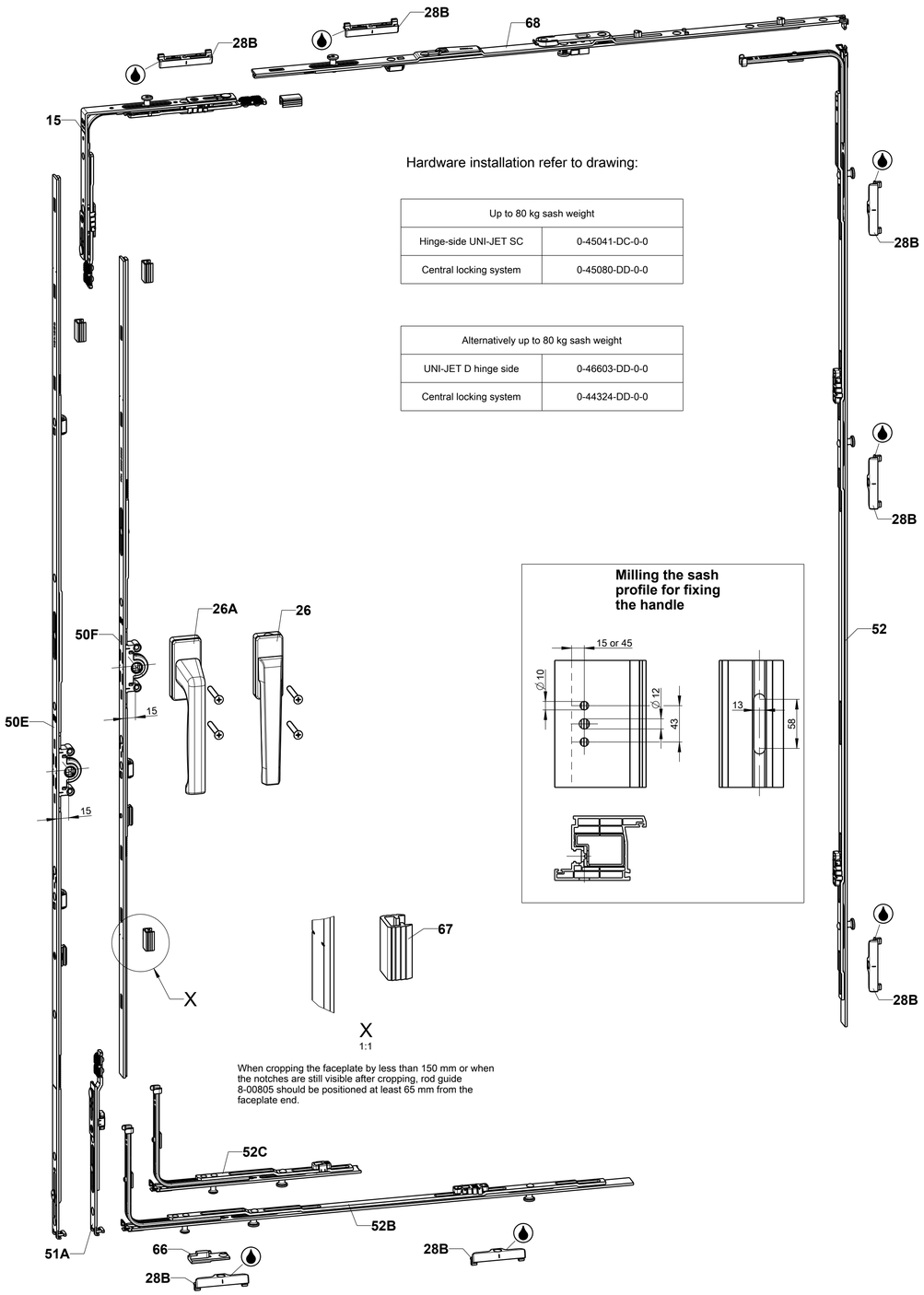

Hardware installation refer to drawing:

Up to 80 kg sash weight	
Hinge-side UNI-JET SC	0-45041-DC-0-0
Central locking system	0-45080-DD-0-0

Alternatively up to 80 kg sash weight	
UNI-JET D hinge side	0-46603-DD-0-0
Central locking system	0-44324-DD-0-0

Milling the sash profile for fixing the handle

When cropping the faceplate by less than 150 mm or when the notches are still visible after cropping, rod guide 8-00805 should be positioned at least 65 mm from the faceplate end.

Central locking system for Tilt&Turn windows
CLS–T&T

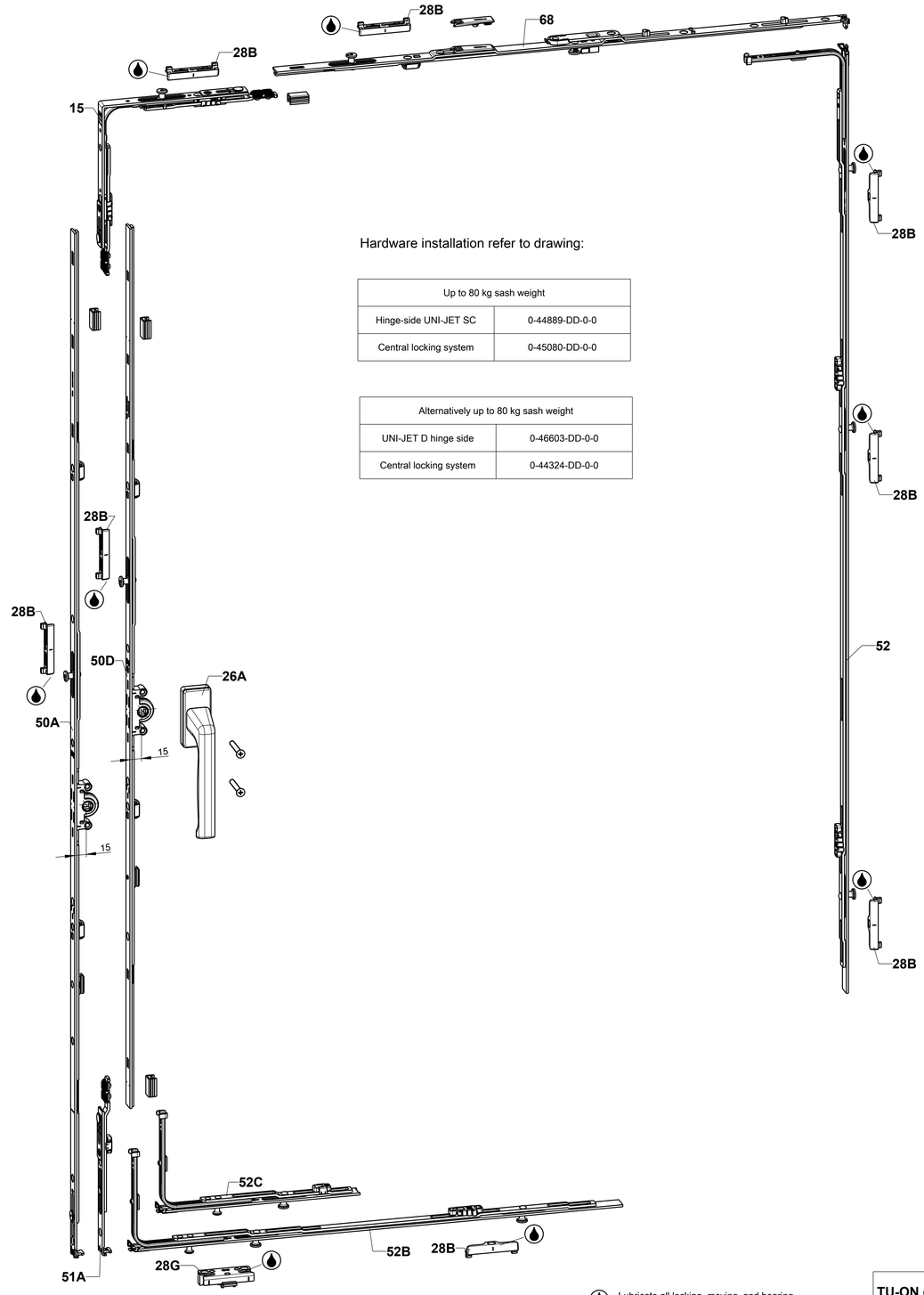

Hardware installation refer to drawing:

Up to 80 kg sash weight	
Hinge-side UNI-JET SC	0-44889-DD-0-0
Central locking system	0-45080-DD-0-0

Alternatively up to 80 kg sash weight	
UNI-JET D hinge side	0-46603-DD-0-0
Central locking system	0-44324-DD-0-0

Lubricate all locking, moving, and bearing points with a lubricant free of resin and acid.

TU-ON central locking system / T&T central locking system

Description

Fold&Slide hardware GU-923, inward
Neutral PVC profiles
Version with dummy-mullion profile

Release No. --	Level	Released		Scale --	Modification 6 / Size 1
Mod. No. G33134	Ver.	--	--		
	Draft	23.03.2017	Mj		Drawing No. 0-46888-BM-0-EN / Sheet 7/14
Replacement for --					

The documents accompanying the product were issued when the product was manufactured. Due to the fact that our products undergo continuous development, you should verify at www.g-u.com, if the technical documents you have at hand are up to date. Be sure to use the latest edition of our technical documents.
Proprietary rights apply in accordance with ISO 16016.

EN
ES
FR
RU
--

V5

GRETSCH-UNITAS

Pattern 321

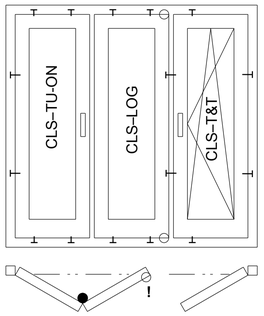

Position of strikers

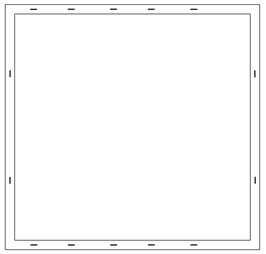

Pattern 330

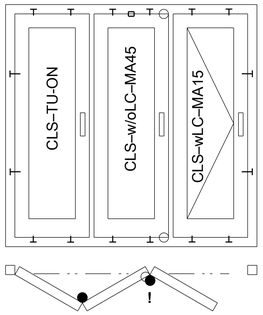

Position of strikers

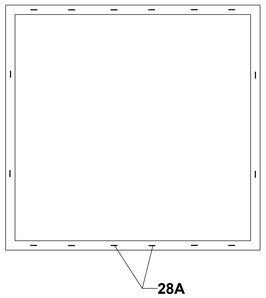

Using the striker installation aid

Strikers are mounted after the F&S unit
is completely installed.

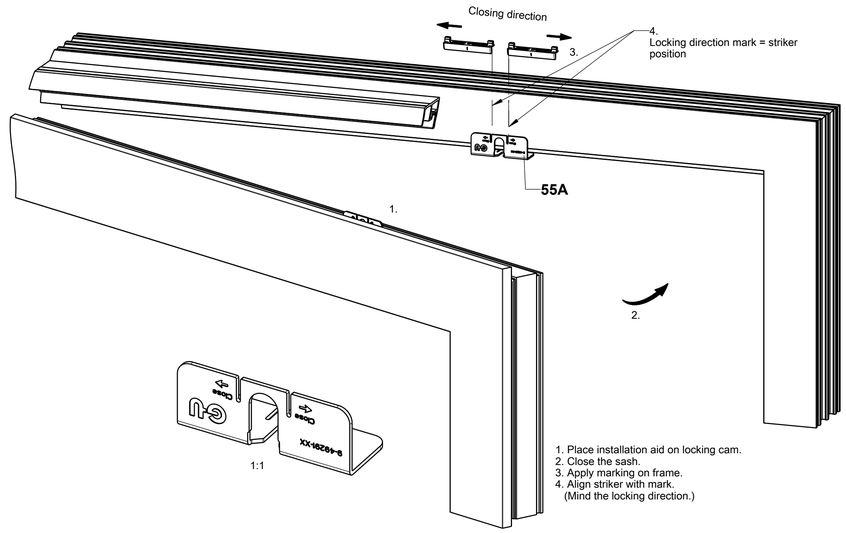

1. Place installation aid on locking cam.
2. Close the sash.
3. Apply marking on frame.
4. Align striker with mark.
(Mind the locking direction.)

1. Place installation aid on locking cam.
2. Close the sash.
3. Apply marking on frame.
4. Align striker with mark.
(Mind the locking direction.)

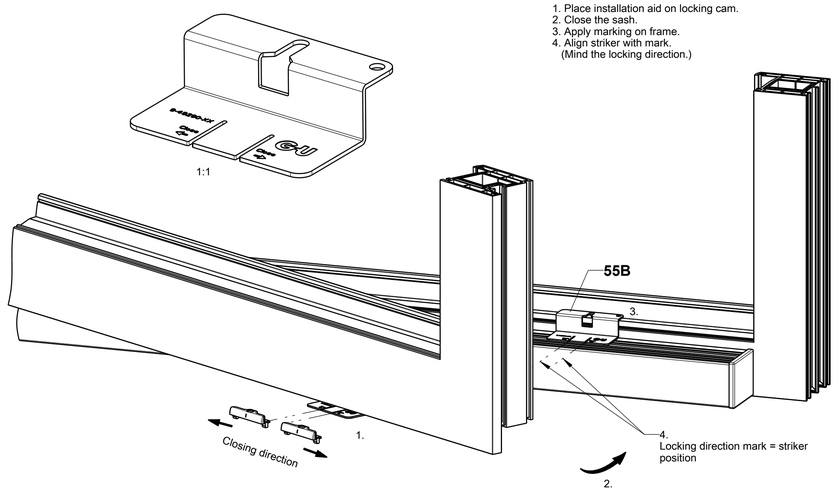

● F&S hinge

○ Pivot-rest

▫ Folding catch

! = With installation dimension 18 it is necessary to round off the overlap in the area of the F&S pivot-rest.

Locking positions for pattern 321 / 330

Description
Fold&Slide hardware GU-923, inward
Neutral PVC profiles
Version with dummy-mullion profile

G-U	Release No. --	Level	Released		Scale --	Modification 6	Size 1
	Mod. No. G33134	Ver.	--	--		Drawing No. 0-46888-BM-0-EN	Sheet 8/14
		Draft	23.03.2017	Mj			
	Replacement for --						

EN
ES
FR
RU
--

The documents accompanying the product were issued when the product was manufactured. Due to the fact that our products undergo continuous development, you should verify at www.g-u.com, if the technical documents you have at hand are up to date. Be sure to use the latest edition of our technical documents.
Proprietary rights apply in accordance with ISO 16016.

V5

GRETSCH-UNITAS

Using the striker installation aid

Strikers are mounted after the F&S unit
is completely installed.

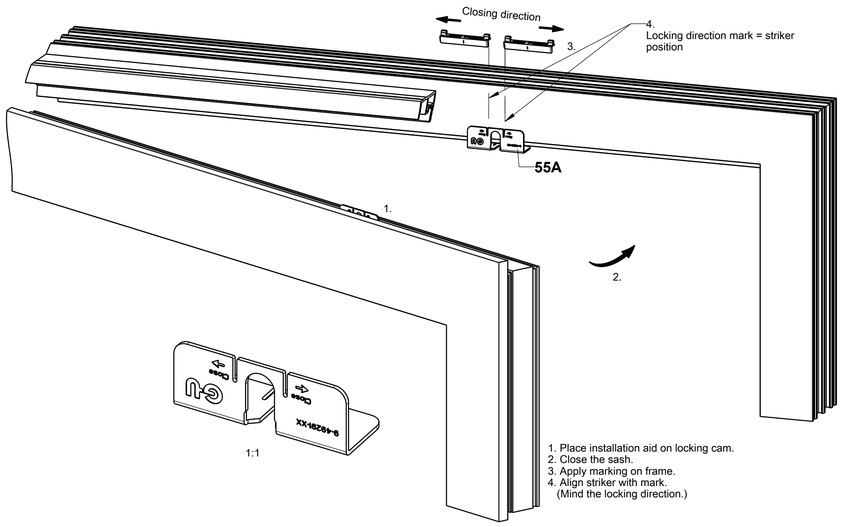

1. Place installation aid on locking cam.
2. Close the sash.
3. Apply marking on frame.
4. Align striker with mark.
(Mind the locking direction.)

Pattern 431

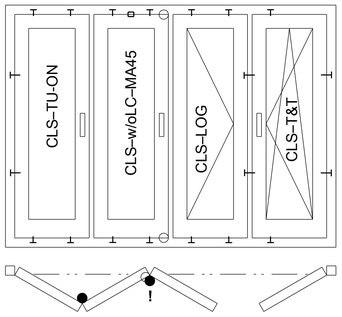

Position of strikers

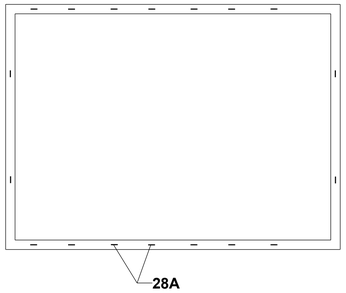

1. Place installation aid on locking cam.
2. Close the sash.
3. Apply marking on frame.
4. Align striker with mark.
(Mind the locking direction.)

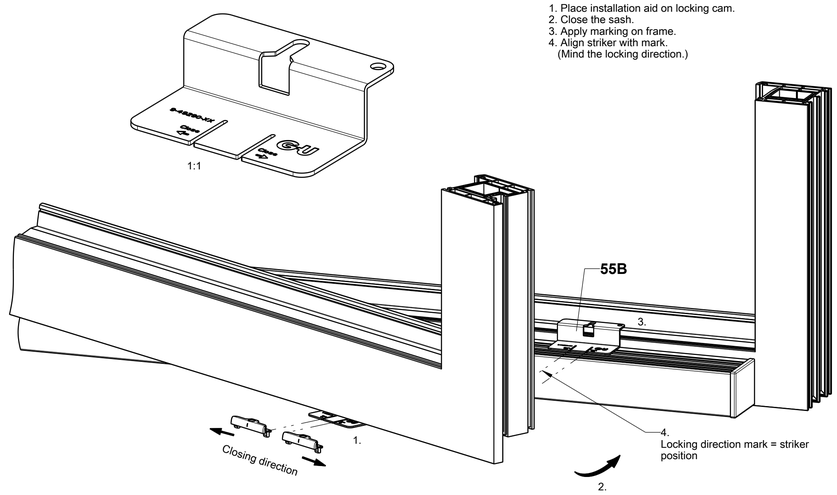

● F&S hinge

○ Pivot-rest

▭ Folding catch

! = With installation dimension 18 it is necessary to round off the overlap in the area of the F&S pivot-rest.

Locking positions for pattern 431

Description

Fold&Slide hardware GU-923, inward
Neutral PVC profiles
Version with dummy-mullion profile

G-U	Release No. --	Level	Released		Scale --	Modification 6	Size 1
	Mod. No. G33134	Ver.	--	--		Drawing No. 0-46888-BM-0-EN	Sheet 9/14
		Draft	23.03.2017	Mj			
	Replacement for --						

The documents accompanying the product were issued when the product was manufactured. Due to the fact that our products undergo continuous development, you should verify at www.g-u.com, if the technical documents you have at hand are up to date. Be sure to use the latest edition of our technical documents.
Proprietary rights apply in accordance with ISO 16016.

EN
ES
FR
RU
--

V5

GRETSCH-UNITAS

Using the striker installation aid

Strikers are mounted after the F&S unit
is completely installed.

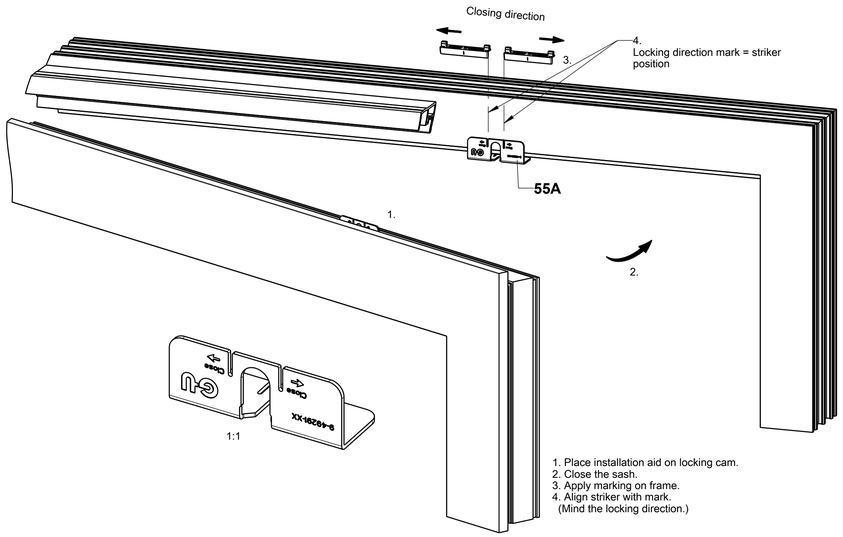

1. Place installation aid on locking cam.
2. Close the sash.
3. Apply marking on frame.
4. Align striker with mark.
(Mind the locking direction.)

Pattern 532

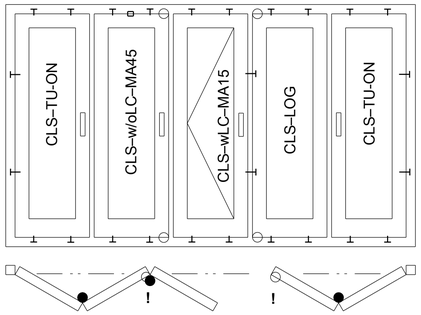

Position of strikers

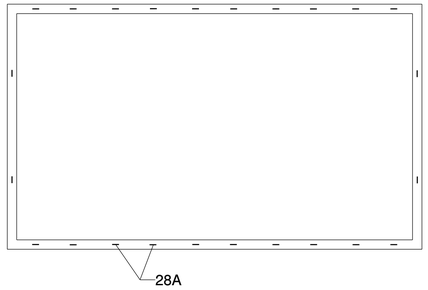

Pattern 541

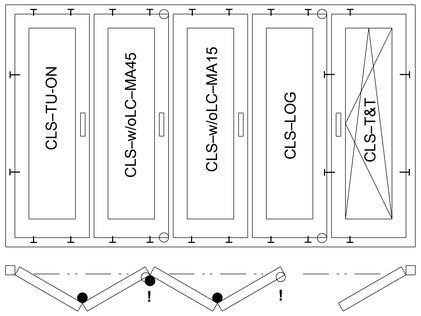

Position of strikers

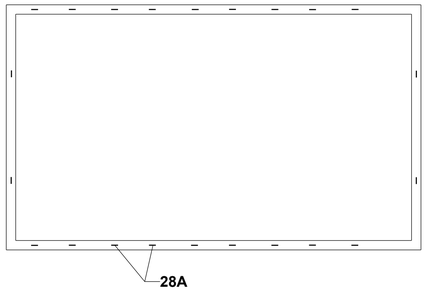

1. Place installation aid on locking cam.
2. Close the sash.
3. Apply marking on frame.
4. Align striker with mark.
(Mind the locking direction.)

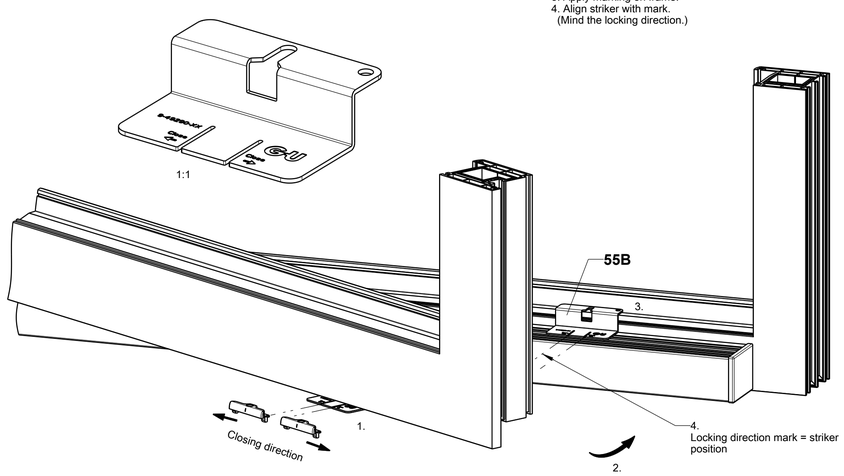

Pattern 550

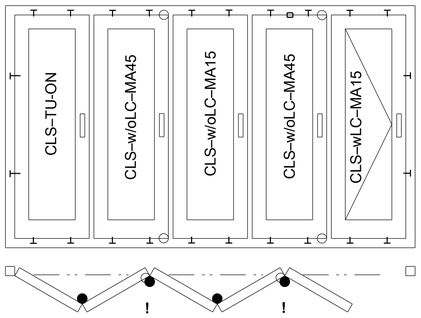

Position of strikers

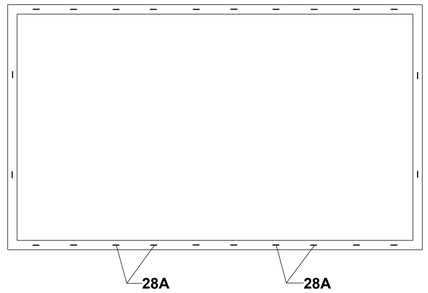

● F&S hinge

○ Pivot-rest

▫ Folding catch

! = With installation dimension 18 it is necessary to round off the overlap in the area of the F&S pivot-rest.

Locking positions for pattern 532 / 541 / 550

Description

Fold&Slide hardware GU-923, inward
Neutral PVC profiles
Version with dummy-mullion profile

Release No. --	Level	Released		Scale --	Modification 6
Mod. No. G33134	Ver.	--	--		Size 1
	Draft	23.03.2017	Mj		Drawing No. 0-46888-BM-0-EN
Replacement for --					Sheet 10/14

The documents accompanying the product were issued when the product was manufactured. Due to the fact that our products undergo continuous development, you should verify at www.g-u.com, if the technical documents you have at hand are up to date. Be sure to use the latest edition of our technical documents.
Proprietary rights apply in accordance with ISO 16016.

EN
ES
FR
RU
--

V5

GRETSCH-UNITAS

Using the striker installation aid

Strikers are mounted after the F&S unit
is completely installed.

Pattern 633

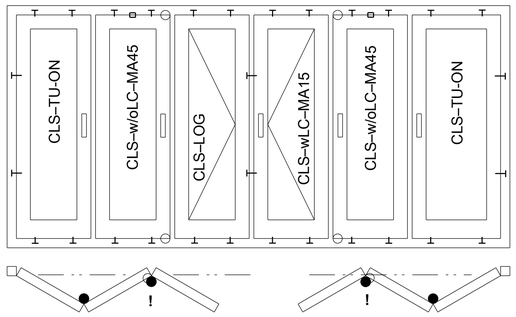

Position of strikers

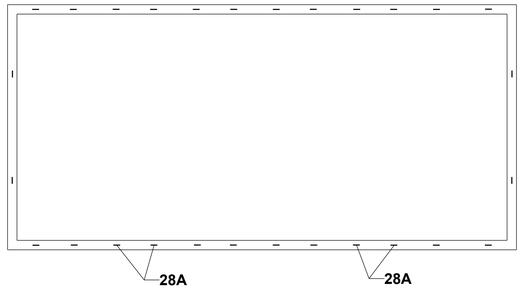

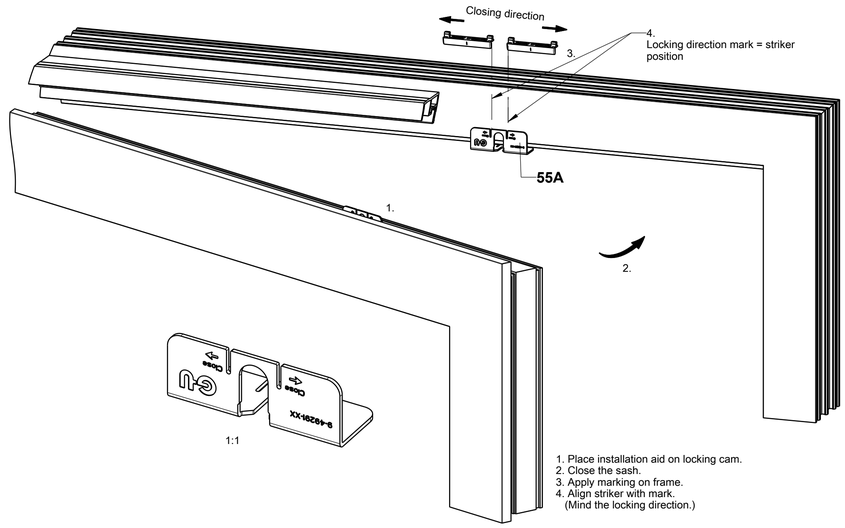

1. Place installation aid on locking cam.
2. Close the sash.
3. Apply marking on frame.
4. Align striker with mark.
(Mind the locking direction.)

Pattern 651

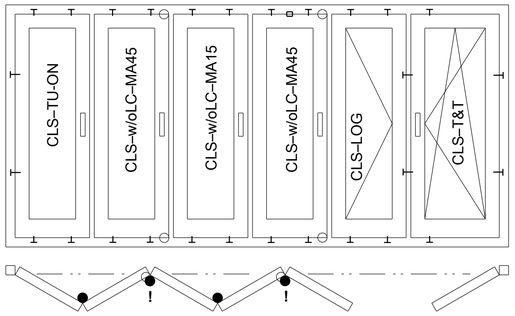

Position of strikers

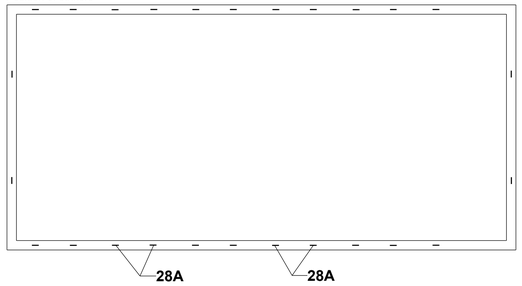

1. Place installation aid on locking cam.
2. Close the sash.
3. Apply marking on frame.
4. Align striker with mark.
(Mind the locking direction.)

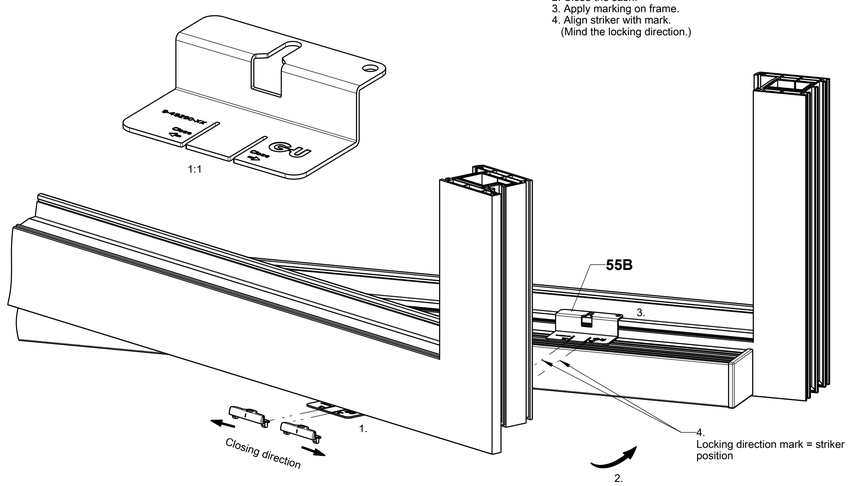

● F&S hinge

○ Pivot-rest

▫ Folding catch

! = With installation dimension 18 it is necessary to round off the overlap in the area of the F&S pivot-rest.

Locking positions for pattern 633 / 651

Description
Fold&Slide hardware GU-923, inward
Neutral PVC profiles
Version with dummy-mullion profile

Release No. --	Level	Released		Scale --	Modification 6	Size 1
Mod. No. G33134	Ver.	--	--		Drawing No. 0-46888-BM-0-EN	Sheet 11/14
	Draft	23.03.2017	Mj			
Replacement for --						

The documents accompanying the product were issued when the product was manufactured. Due to the fact that our products undergo continuous development, you should verify at www.g-u.com, if the technical documents, you have at hand are up to date. Be sure to use the latest edition of our technical documents.
Proprietary rights apply in accordance with ISO 16016.

EN
ES
FR
RU
--

V5

GRETSCH-UNITAS

Pattern 743

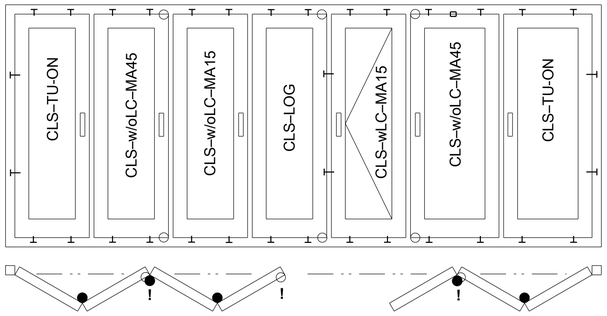

Position of strikers

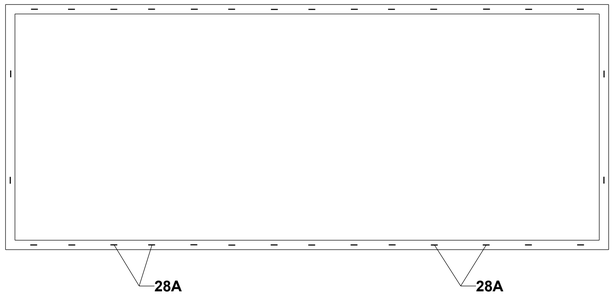

Pattern 761

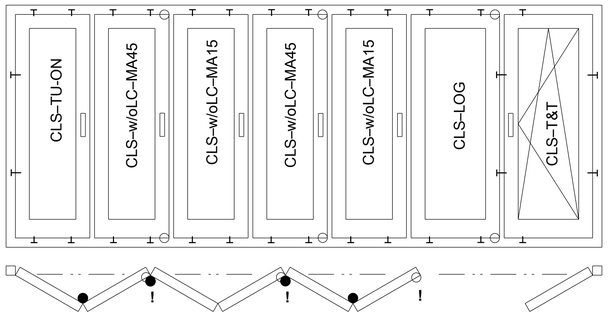

Position of strikers

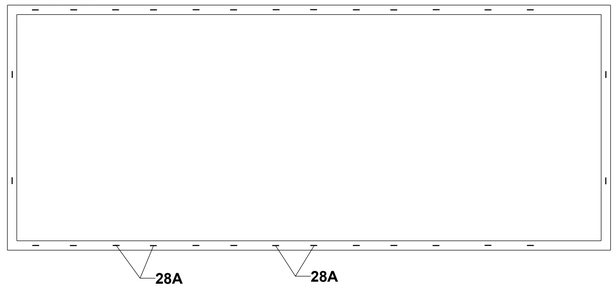

Pattern 770

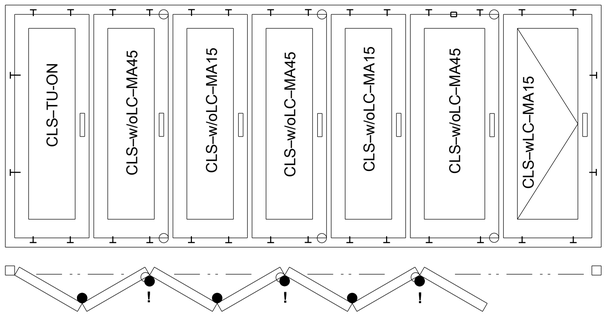

Position of strikers

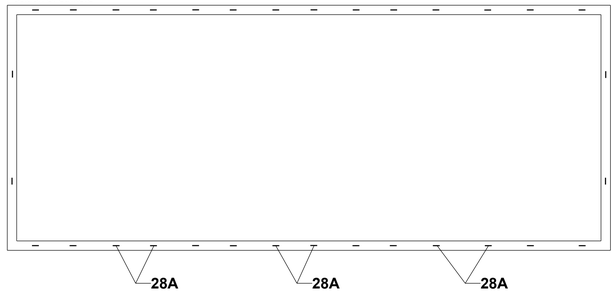

Using the striker installation aid

Strikers are mounted after the F&S unit
is completely installed.

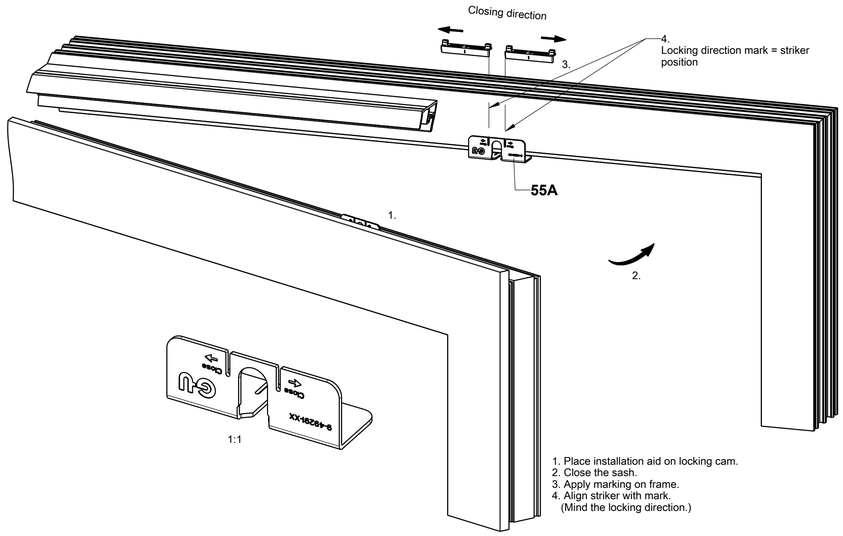

1. Place installation aid on locking cam.
2. Close the sash.
3. Apply marking on frame.
4. Align striker with mark.
(Mind the locking direction.)

1. Place installation aid on locking cam.
2. Close the sash.
3. Apply marking on frame.
4. Align striker with mark.
(Mind the locking direction.)

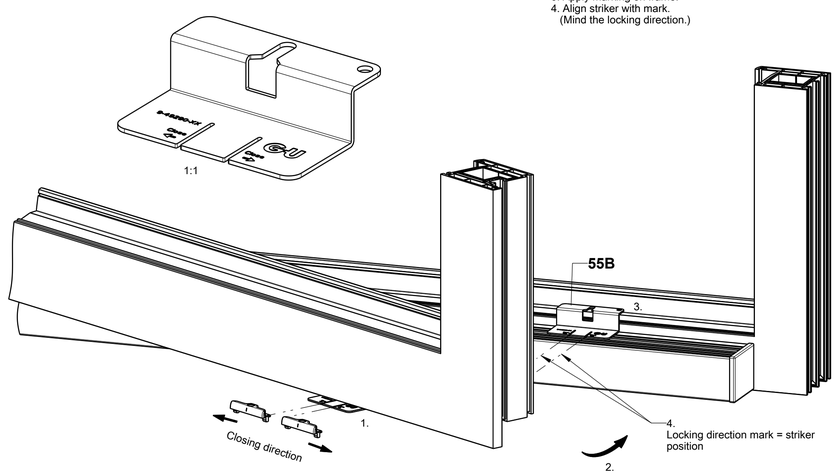

● F&S hinge

○ Pivot-rest

▫ Folding catch

! = With installation dimension 18 it is necessary to round off the overlap in the area of the F&S pivot-rest.

Locking positions for pattern 743 / 770 / 761

Description

Fold&Slide hardware GU-923, inward
Neutral PVC profiles
Version with dummy-mullion profile

G-U	Release No. --	Level	Released		Scale --	Modification 6	Size 1
	Mod. No. G33134	Ver.	--	--		Drawing No. 0-46888-BM-0-EN	Sheet 12/14
		Draft	23.03.2017	Mj			
	Replacement for --						

The documents accompanying the product were issued when the product was manufactured. Due to the fact that our products undergo continuous development, you should verify at www.g-u.com, if the technical documents you have at hand are up to date. Be sure to use the latest edition of our technical documents.
Proprietary rights apply in accordance with ISO 16016.

EN
ES
FR
RU
--

V5

GRETSCH-UNITAS

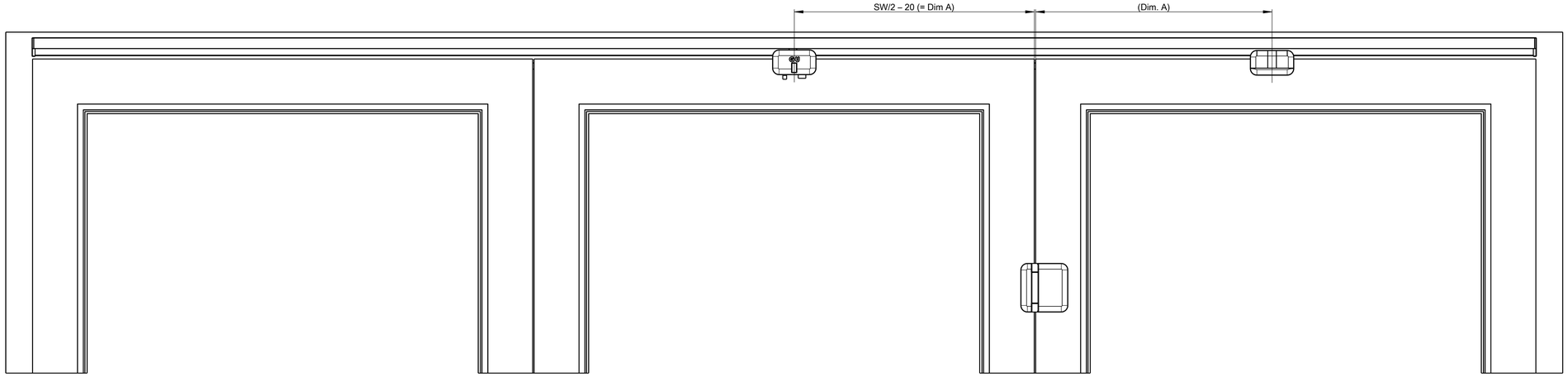

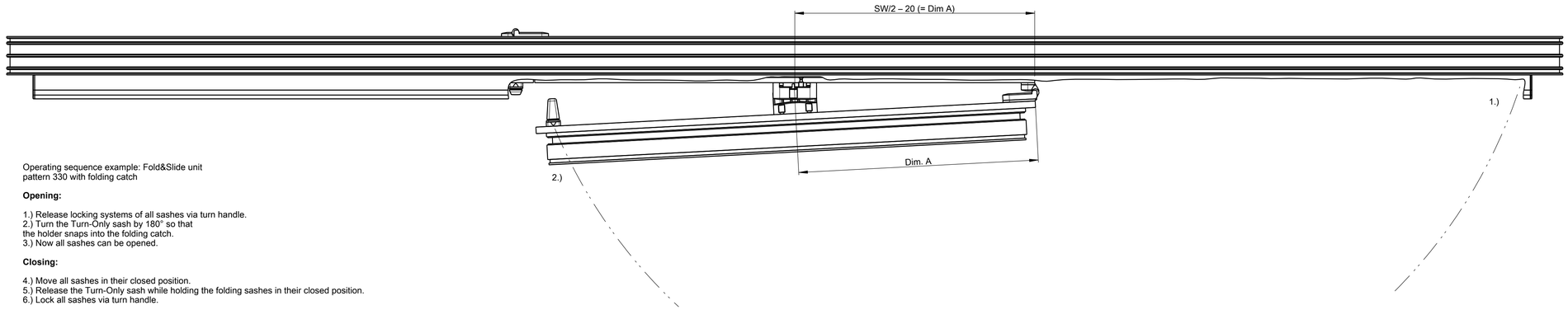

Operating sequence example: Fold&Slide unit
pattern 330 with folding catch

Opening:

1.) Release locking systems of all sashes via turn handle.
2.) Turn the Turn-Only sash by 180° so that
the holder snaps into the folding catch.
3.) Now all sashes can be opened.

Closing:

4.) Move all sashes in their closed position.
5.) Release the Turn-Only sash while holding the folding sashes in their closed position.
6.) Lock all sashes via turn handle.

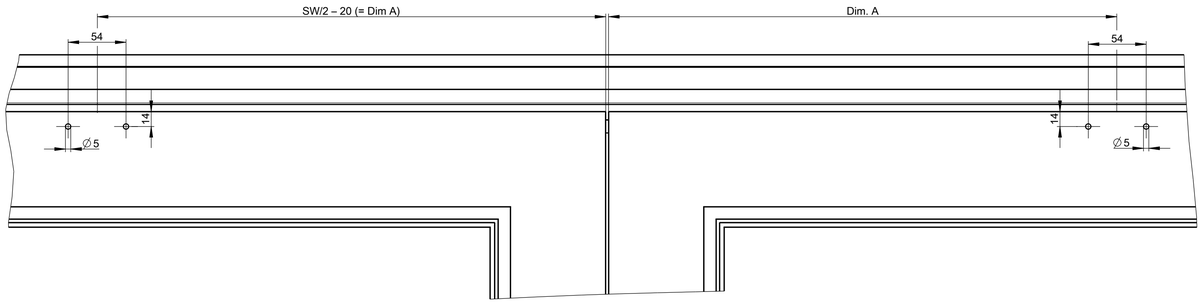

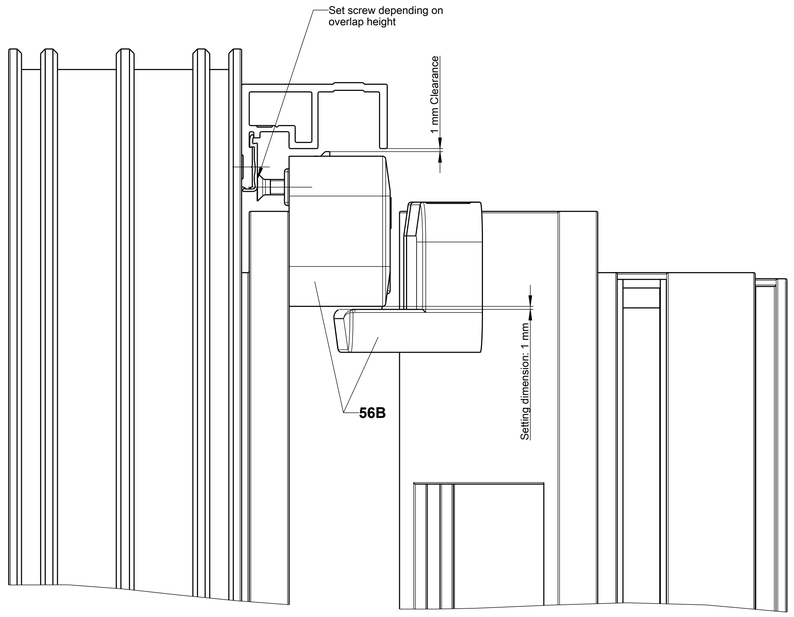

The documents accompanying the product were issued when the product was manufactured. Due to the fact that our products undergo continuous development, you should verify at www.g-u.com, if the technical documents you have at hand are up to date. Be sure to use the latest edition of our technical documents.
Proprietary rights apply in accordance with ISO 16016.

EN
ES
FR
RU
--

V5

Folding catch

Description
Fold&Slide hardware GU-923, inward
Neutral PVC profiles
Version with dummy-mullion profile

G-U	Release No. --	Level	Released		Scale --	Modification 6	Size 1
	Mat. No. G33134	Ver.	--	--		Drawing No. 0-46888-BM-0-EN	Sheet 13/14
		Draft	23.03.2017	Mj			
	Replacement for --						

GRETSCH-UNITAS

Pivot-rest

Application of drilling jig in case of standard installation of roller track

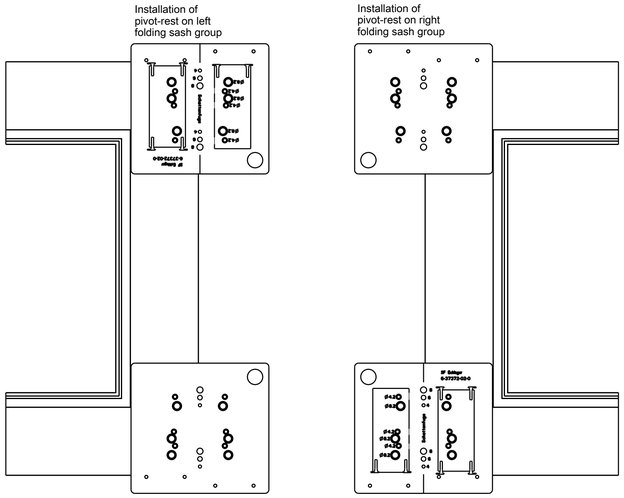

Application of drilling jig in case of alternative installation of roller track

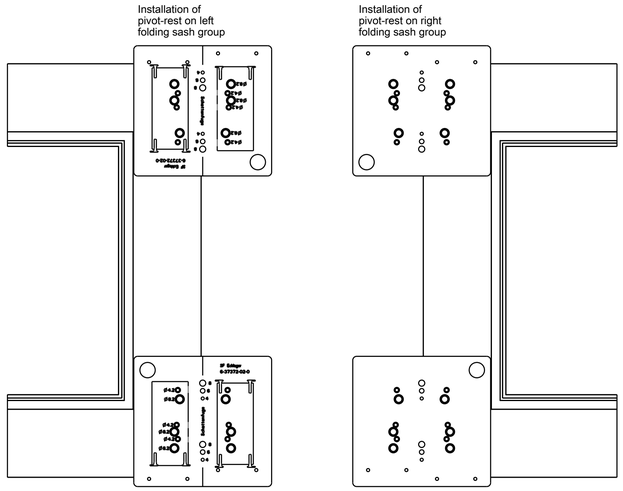

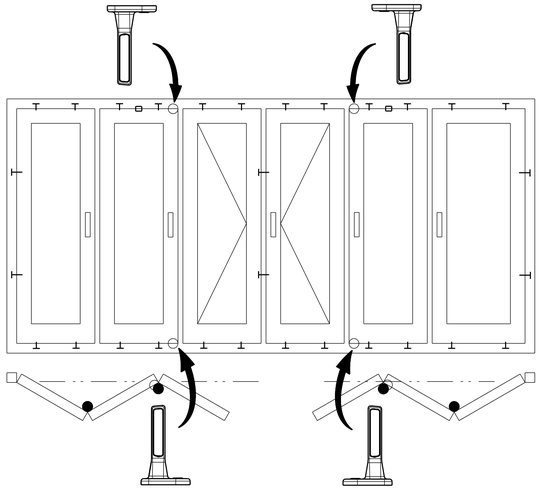

F&S drilling jig for pivot-rest

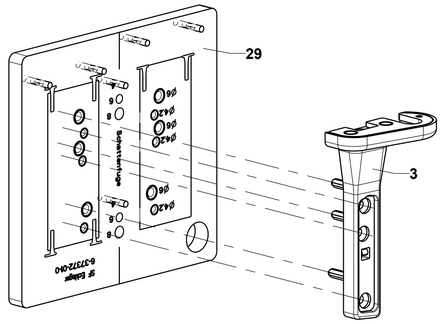

Pivot-rest

Application of drilling jig in case of standard installation of roller track

top and bottom

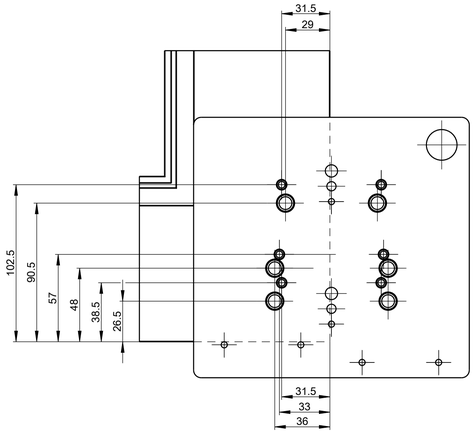

Application of drilling jig in case of alternative installation of roller track

bottom

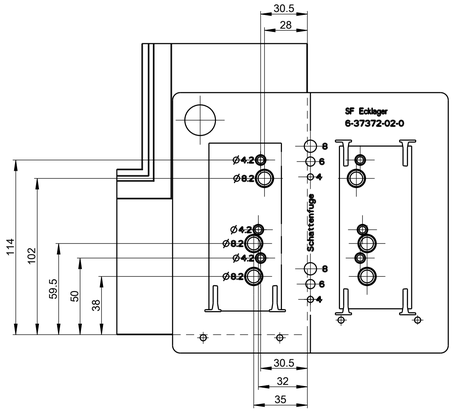

F&S drilling jig for sash hinge, complete

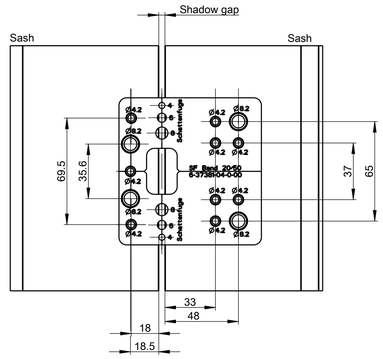

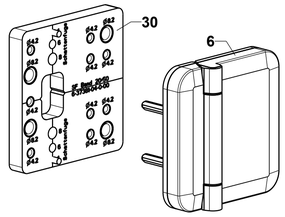

Sectional illustration B, C and G with interior/exterior handle and PC gear

Installation see 0-44456-DA

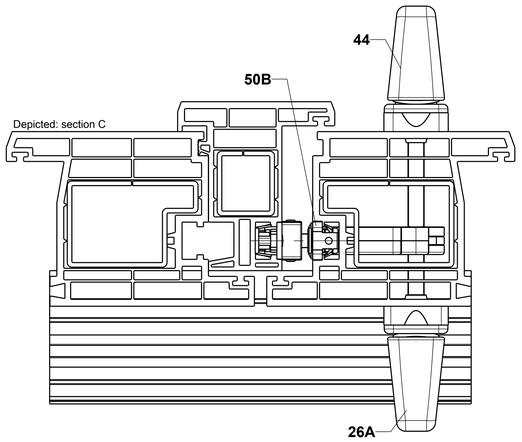

Open-end spanner SW17

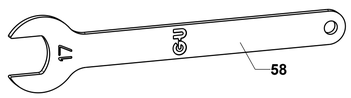

Drilling jig for roller track and guide track

Remove chippings from roller track after the drilling.

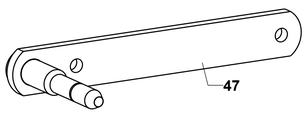

UNI-JET adjusting tool

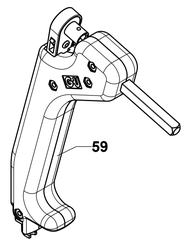

Pull-handle for stay-bearing pin

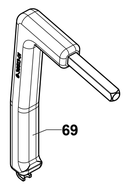

Drilling jig for folding catch

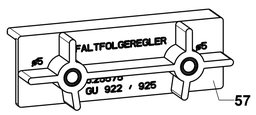

Attention!
For drilling jigs refer to profile-related drawings.

Accessories and drilling jigs

Description
Fold&Slide hardware GU-923, inward
Neutral PVC profiles
Version with dummy-mullion profile

G-U	Release No. --	Level	Released	Scale --	Modification 6	Size 1
	Mod. No. G33134	Ver.	-- --		Drawing No. 0-46888-BM-0-EN	Sheet 14/14
		Draft	23.03.2017 Mj			
	Replacement for --					

EN
ES
FR
RU
--

The documents accompanying the product were issued when the product was manufactured. Due to the fact that our products undergo continuous development, you should verify at www.g-u.com, if the technical documents you have at hand are up to date. Be sure to use the latest edition of our technical documents.
Proprietary rights apply in accordance with ISO 16016.

V5